OMRON

Programmable Controller

SYSMAC CQM1H

Distributed Control with Compact PLCs

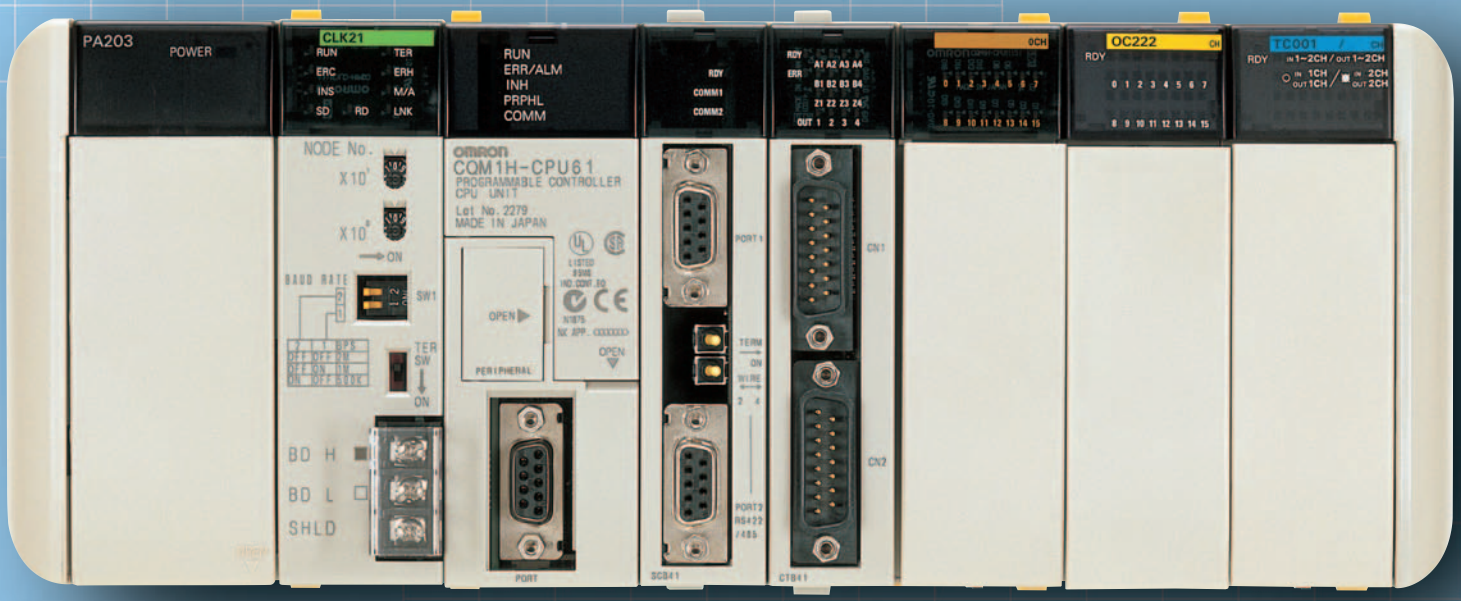

The CQM1H provides higher value-added machine control in a flexible system configuration. Its very compact design contains many advanced functions for distributed control.

Machine control continually requires more advanced functions and higher processing speeds. The CQM1H is designed to provide higher value-added machine control with a full complement of functions in a compact PLC, such as industry-leading distributed control, improved upgradability with a variety of advanced Inner Boards, high-capacity program and memory areas, and more efficient software development with Windows software. The CQM1H can also be used to control packaging systems that support the HACCP（Hazard Analysis Critical Control Point）process control standards.

POINT1

Build a distributed control system with the high-speed, high-capacity Controller Link System.

Controller Link Units can be used to transfer data between several PLCs or manage a distributed control system from a central personal computer to monitor PLC operation, edit PLC programs, and read/write PLC data. With a Controller Link Network, it is easy to manage a system from a central location to gather and share operating data, production progress at each machine, and quality data.

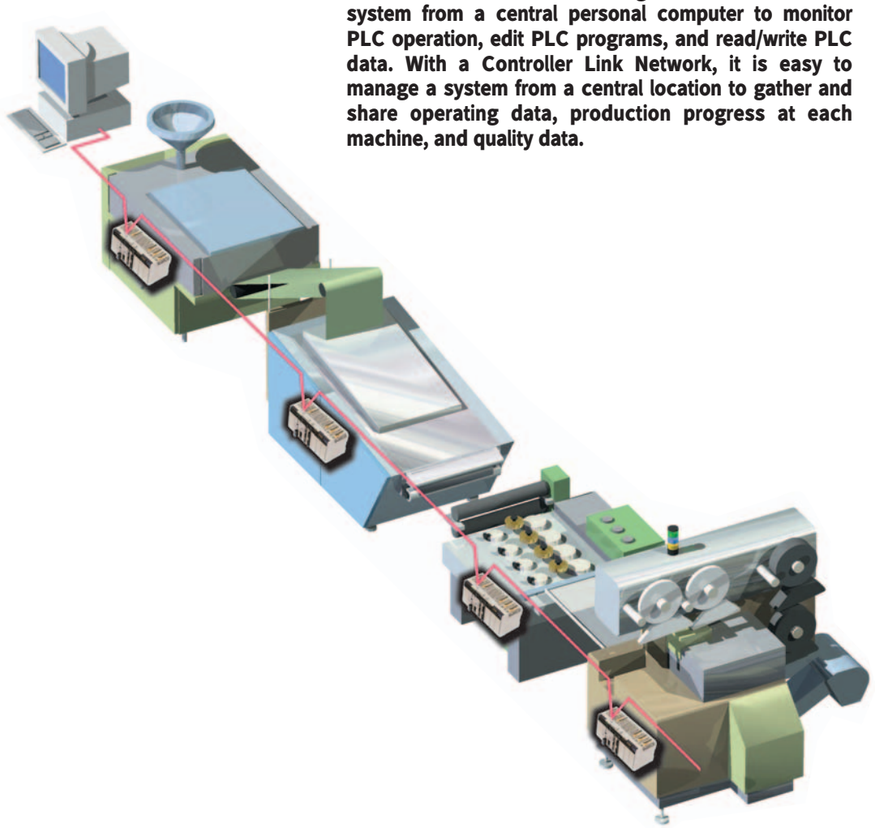

POINT 2

Advanced Inner Boards allow flexible system configurations.

A variety of advanced Inner Boards, such as the High-speed Counter Board and Serial Communications Board, are available. Mount the desired Inner Board in the CPU Unit to meet the requirements of each machine application. A Serial Communications Board can communicate with essentially any device with a serial port, such as temperature controllers or bar-code readers. The optimum system can be configured to match the specifications and scale of the machine or equipment being controlled.

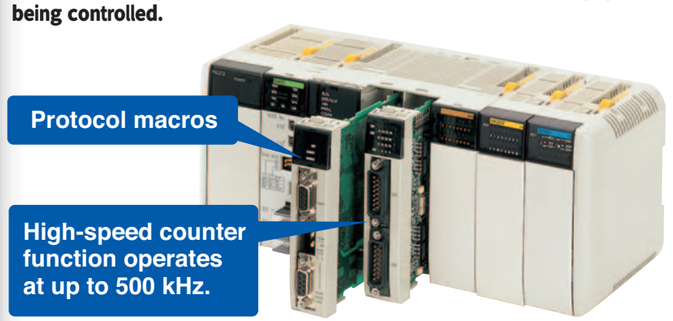

POINT 3

Double the number of I/O points and program capacity to provide sufficient control capability.

The program capacity, DM capacity, and number of I/O points have all been doubled from the CQM1. The program and DM capacity have been increased to accommodate the more complicated control programs and increased data processing required with more advanced functions and the number of I/O points has been increased to support larger systems and Dedicated I/O Units.

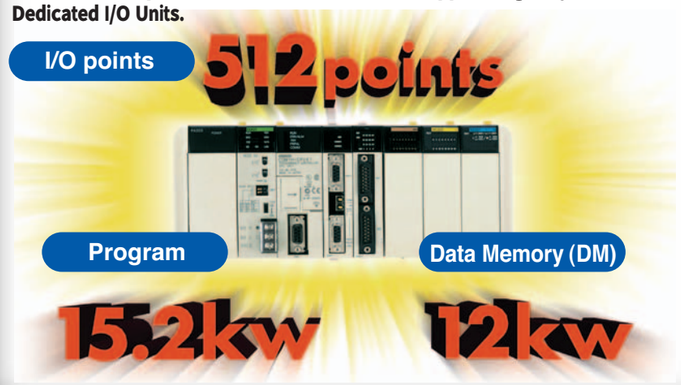

INDEX

■Basic Concepts 2

■Features 4
Inner Boards ····4
Using Existing System Components and Programs ····4
Increased Capacity and Speed ····4
Flexible System Configuration ····4
Distributed Control ····5
Compatibilities ····5
High-speed/Long-distance Communications ····5
Windows-based Support Softwarre ····6
Advanced Math and Communications Instructions ····6
Improved HMI ····6

■Applications 7
Vacuum-packing Food Packager ····7
Filling and Packaging Machine ····7

■Product Lineup 8

■CPU Unit Descriptions 10
CPU Units ····10
Power Supply Units and I/O Expansion Units ····11
Memory Cassettes ····13
Specifications ····14
I/O Functions ····19
I/O Memory Allocation ····21
Instructions ····22
I/O Specifications ····25
Programming Devices ····30
Dimensions ····32

■Inner Boards 34
High-speed Counter Board (CQM1H-CTB41) ····35
Pulse I/O Board (CQM1H-PLB21) ····37
Absolute Encoder Interface Board (CQM1H-ABB21) ····40
Serial Communications Board (CQM1H-SCB41) ····42
Analog I/O Board (CQM1H-MAB42) ····44
Analog Setting Board (CQM1H-AVB41) ····46

■Communications Units 47
Controller Link Unit (CQM1H-CLK21) ····47

■Dedicated I/O Units 49
Analog Input Unit (CQM1-AD041) ····50
Analog Output Unit (CQM1-DA021) ····51
Power Supply Units (CQM1-IPS01/IPS02) ····52
CompoBus/S Master Unit (CQM1-SRM21-V1) ····53
DeviceNet I/O Link Unit (CQM1-DRT21) ····56
B7A Interface Unit (CQM1-B7A02/03/12/13/21) ····58
Temperature Control Units (CQM1-TC□0□) ····61
Safety Relay Unit (CQM1-SF200) ····64

■Ordering Information 66

■Peripheral Devices 72
Labor-saving Connectors (CQM1-ID/OD) ····72
Expansion Memory Unit (CPM1-EMU01-V1) ····75
Absolute Rotary Encoders (E6C2-AG5C) ····76

A full complement of functions enables advanced machine control.

Equipment functions can be upgraded easily with a variety of advanced Inner Boards.

The CQM1H features Inner Boards that allow simple positioning, multi-point high-speed counter inputs, absolute rotary encoder inputs, analog I/O, analog settings, and serial communications for connection to standard serial devices.
Select Inner Boards to customize the PLC's capabilities for your applications.

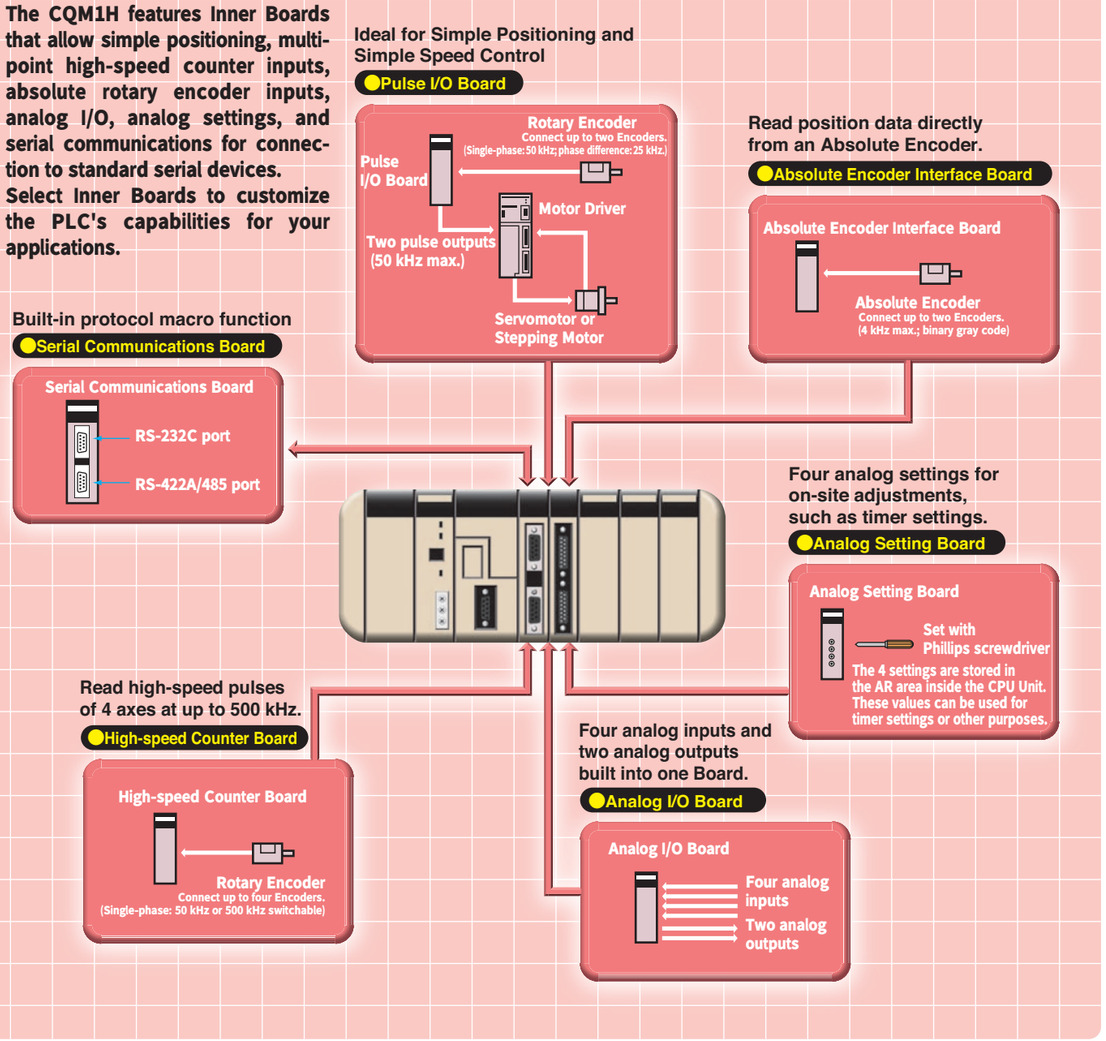

Use existing system components and programs.

SYSMAC CQM1 Power Supply Units, Basic I/O Units, Dedicated I/O Units, programs, Programming Consoles, and Memory Cassettes can be used, so a system upgrade can be performed very smoothly.

Increased capacity and speed provide extra capacity for control applications.

The program capacity, I/O capacity, and DM capacity have been doubled. A 16-Kword Memory Cassette can be installed to accommodate the storage and transfer of the program. Furthermore, the execution times have been reduced from 0.50 µs to 0.375 µs for basic instructions and from 23.5 µs to 17.7 µs for special instructions (MOV). Overall, the cycle time has been reduced by about 25%.

Flexible System Configuration

The CQM1H does not require a Backplane and is constructed by connecting Units via connectors on the sides of the Units, allowing flexible system configuration and the most efficient use of space. The CPU Unit contains 16 built-in DC input points. Two Inner Boards can be mounted in the CPU Unit. One Controller Link Unit (a Communications Unit) and a combined maximum of eleven I/O Units and Dedicated I/O Units can also be connected.

Establish distributed control with the Controller Link Network to transfer data easily between PLCs in the network.

A Controller Link Unit can be connected to the CQM1H and easily connected to the network with twisted-pair wiring. Data can be exchanged efficiently between PLCs in the network using both data links and message communications. Data can be transferred with personal computers running Windows, as well as with the CS1, C200HX/HG/HE, CVM1, and CV-series PLCs.

High Speed
High-speed 2-Mbps link

High Capacity
High-capacity data link of up to 32,000 words/network and 8,000 words/node.

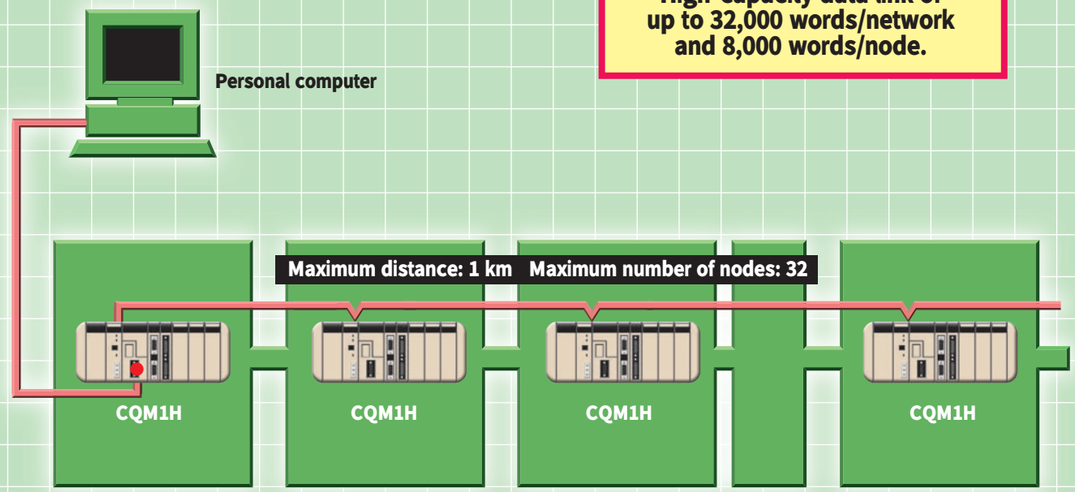

Improve Communications Compatibility with the Serial Communications Board.

Connections can be easily made to general-purpose machine components and dedicated controllers. The Serial Communications Board (an Inner Board) supports protocol macros. You can create macros for protocols to match the communications specifications of an external device, allowing data transfers with devices such as temperature controllers and bar code readers to be executed with a single PMCR instruction.

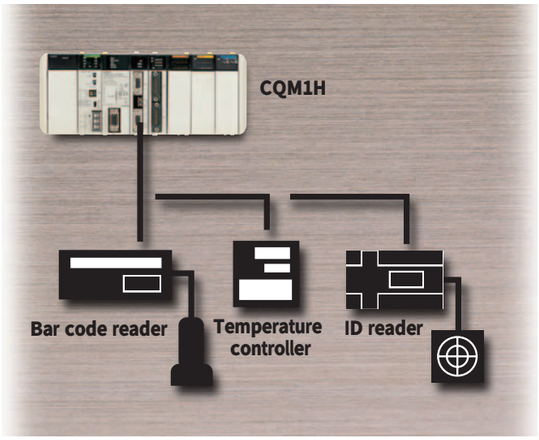

Establish High-speed/Long-distance Communications with CompoBus/S.

Connect a CompoBus/S Master Unit to the CQM1H to establish high-speed or long-distance remote I/O communications with CompoBus/S Slaves.

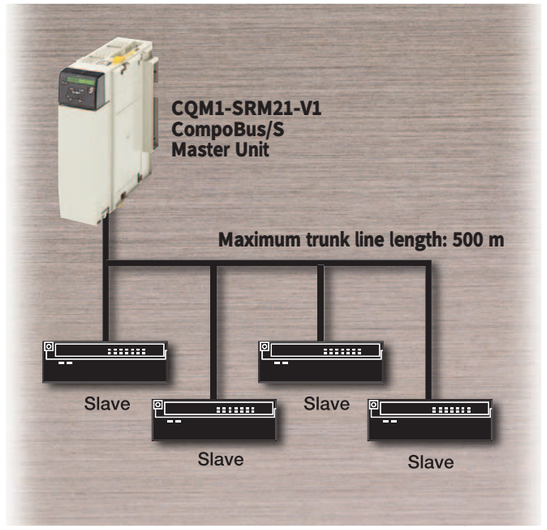

Improved Programming Software and Instructions

Windows-based Support Software

The Windows-based CX-Programmer Support Software reduces software development time and provides powerful monitoring and debugging functions. Other Windows applications can be used and the programming environment has been greatly improved.

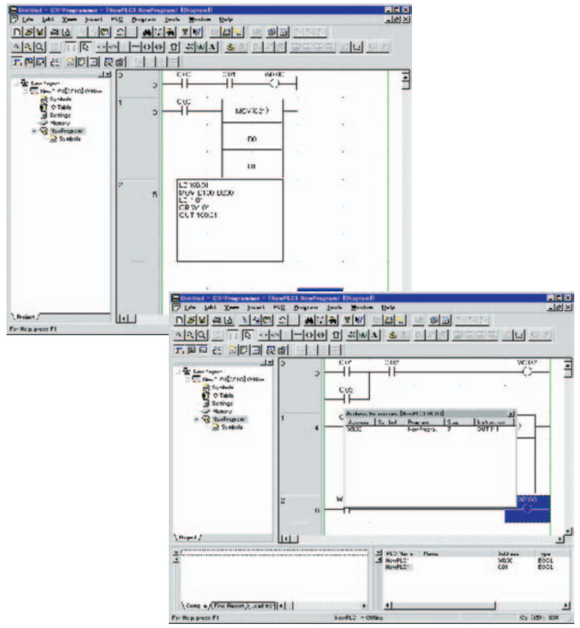

Reduce Software Development Time with Windows-based CX-Programmer

CX-Programmer's many monitoring and debugging functions provide powerful support for multiple program development.

- **User-friendly operations**
- **Powerful display/monitoring functions**
- **Powerful debugging functions**
- **Remote programming and monitoring**
- **Maintenance functions**
- **Data compatibility with Windows applications**

The CQM1H has been equipped with the protocol macro function. Protocol macros allow different serial communications protocols to be developed to transfer data to and from external devices. Custom protocol macros can be created easily with the Windows-based CX-Protocol Software.

Advanced Math and Communications Instructions

Many advanced instructions have been added to the CQM1H, including floating-point math instructions, exponential/logarithm instructions, trigonometric instructions, the TTIM (TOTALIZING TIMER) instruction, PMCR (PROTOCOL MACRO) instruction, STUP (CHANGE SERIAL PORT SETUP) instruction, and network (SEND, RECV, and CMND) instructions. These advanced instructions are easy-to-use and simplify program development.

A wealth of monitoring and setting methods greatly improve the HMI.

Programming Devices and Programmable Terminals (PTs) can be connected to up to four ports. You can set up and monitor machine control from a PT while monitoring or programming from a Programming Console or a personal computer. It is even possible to monitor and program the PLC remotely from a personal computer connected through a modem.

- **Program and monitor with Programming Console functions to make settings and monitor operation from a PT**
- **Program and monitor from a remote location.**

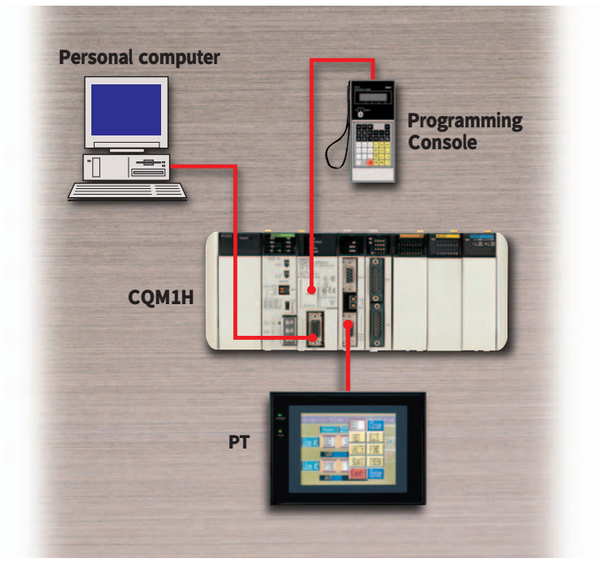

More advanced and higher value-added machinery.

Application 1

Vacuum-packing Food Packager

Combine Inner Boards and Dedicated I/O Units to build the control system that is ideal for an analog-control or pulse-control application. Parameters and data settings can be changed from a PT.

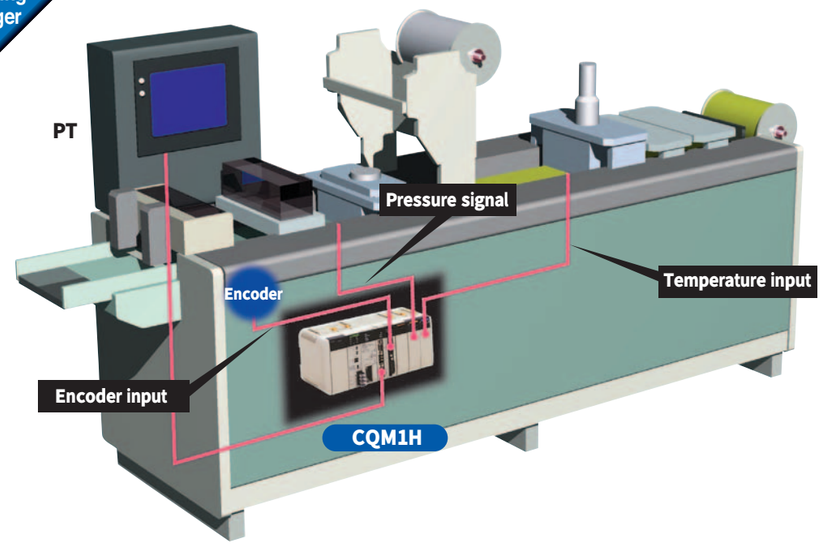

Application 2

Filling and Packaging Machine

Connect several PLCs and a personal computer in a network to transfer data between machines and the computer to manage production data.

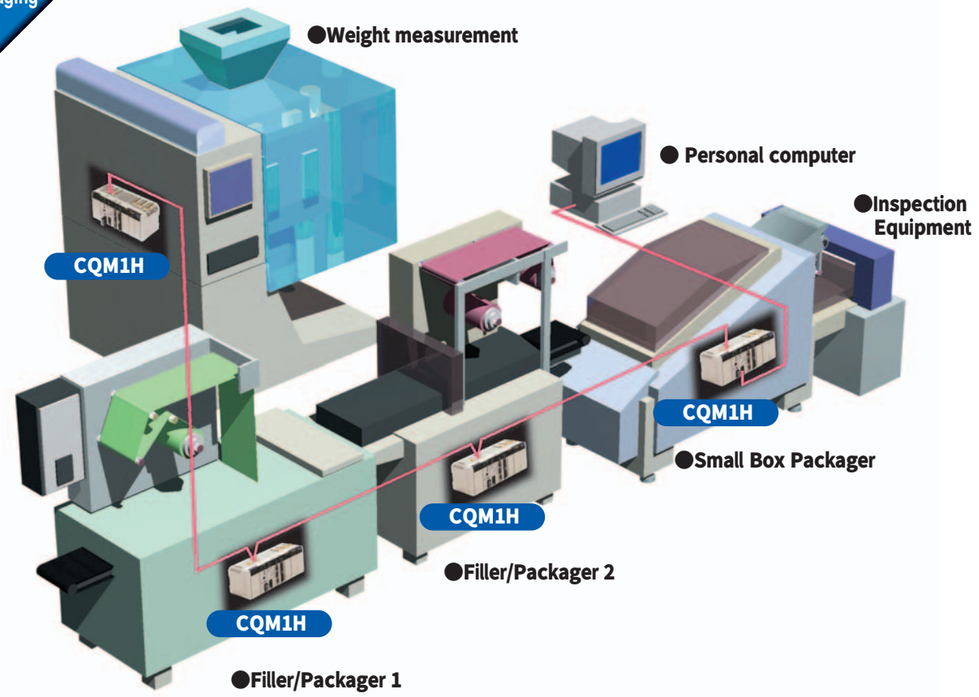

The large number of available Units allows for a flexible system configuration.

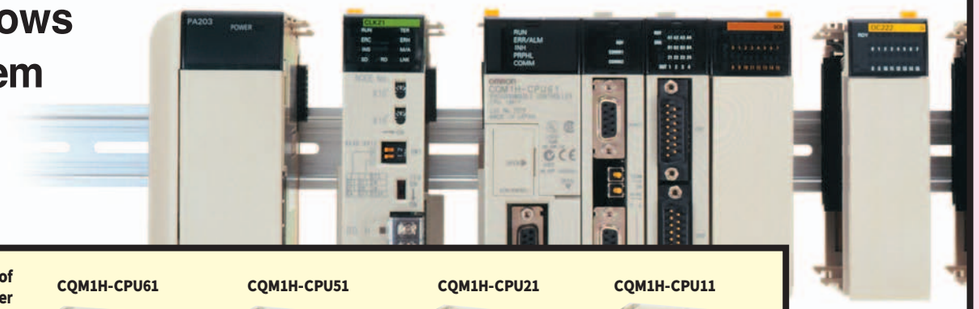

■CPU Units

Four CPU Unit models are available. Two of them support Inner Boards and a Controller Link Unit. You can also select the CPU Unit that best suits your application according to differences in program capacity, I/O capacity, EM area support, and RS-232C port support. The following table shows the specifications of each CPU Unit.

CQM1H-CPU61 CQM1H-CPU51 CQM1H-CPU21 CQM1H-CPU11

Model number	I/O capacity *1	Program capacity	DM area size	EM area size	CPU Unit's built-in I/O points	Communications ports		Inner Boards	Communications Units
						Peripheral	RS-232C		
形CQM1H-CPU61	512 points	15.2 Kwords	6 Kwords	6 Kwords	16 DC inputs	○	○	Supported	Supported
形CQM1H-CPU51	512 points	7.2 Kwords	6 Kwords	×		○	○		
形CQM1H-CPU21	256 points	3.2 Kwords	3 Kwords	×		○	○	Not supported	Not supported
形CQM1H-CPU11	256 points	3.2 Kwords	3 Kwords	×		○	×		

*Up to 256 inputs and 256 outputs

■Power Supply Units

Both AC and DC Power Supply Units are available. The AC Power Supply Units require a power supply input in the range 100 to 240 V AC and two models are equipped with a 24-V DC power supply output. The CQM1H's left End Cover is partof the Power Supply Unit. Refer to the CQM1H Operation Manual (W363) for details on selecting a Power Supply Unit.

Name	Model number	Rated supply voltage	Operating voltage range	Output capacity	Service power supply
AC Power Supply Units	CQM1-PA203	100 to 240 V AC, 50/60 Hz (wide range)	85 to 265 V AC	18 W 5 V DC: 3.6 A	×
	CQM1-PA206			30 W total 5 V DC: 6 A 24 V DC: 0.5 A	24 V DC 0.5 A
	CQM1-PA216	100 or 230 V AC (selectable), 50/60 Hz			
DC Power Supply Unit	CQM1-PD026	24 V DC	20 to 28 V DC	30 W 5 V DC: 6 A	×

CQM1-PA206 CQM1-PA216 CQM1-PA203 CQM1-PD026

■Memory Cassettes (Optional)

Memory Cassettes are available with flash memory, EEPROM and EPROM.Store data on the Memory Cassette to avoid losing program or DM data in the event of battery expiration or careless programming/monitoring operations.The program and data can be transferred between the CPU Unit's RAM and the Memory Cassette. (Data can be transferred from the CPU Unit's RAM to Memory Cassettes with flash memory or EEPROM only.)

Memory type	Model number	Capacity	Clock
EEP-ROM	CQM1-ME04K	4 K words	×
	CQM1-ME04R		○
	CQM1-ME08K	8 K words	×
	CQM1-ME08R		○
Flash memory	CQM1H-ME16K	16 K words	×
	CQM1H-ME16R		○
EP-ROM	CQM1-MP08K	Chips sold separately	×
	CQM1-MP08R		○

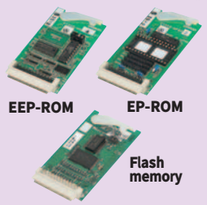

EEP-ROM EP-ROM Flash memory

●Built-in clock

When a Memory Cassette with a built-in clock is installed, time and date information can be used in the program.

■Controller Link Unit

Connect a Controller Link Unit to the CQM1H to connect it to a Controller Link Network. Large quantities of data can be transferred easily and flexibly with personal computers, as well as with other CQM1H, CS1, C200HX/HG/HE, CVM1, and CV-series PLCs.

*The CQM1H-CPU51 and CQM1H-CPU61 support Controller Link Units.

CQM1H-CLK21

Name	Model number	Specifications
Controller Link Unit	CQM1H-CLK21	Data link (transmission area of 1,000 words/node) Message communications (with SEND, RECV, and CMND instructions)

A Communications Unit is connected between the Power Supply Unit and the CPU Unit.

■Inner Boards

The six Inner Boards are shown below. Inner Boards can be mounted in slot 1 or slot 2 of a CQM1H-CPU51 or CQM1H-CPU61. (Some Inner Boards can be mounted only in slot 1 or only in slot 2.)

CQM1H-CTB41 CQM1H-PLB21 CQM1H-ABB21 CQM1H-AVB41 CQM1H-MAB42 CQM1H-SBC41

Name	Model number	Specifications
High-speed Counter Board	CQM1H-CTB41	Pulse inputs (high-speed counter): 4 points (single-phase : 50 kHz/500 kHz switchable; phase difference : 1x/2x/4x multiplication ratio, 25 kHz/250 kHz switchable) External outputs : 4 points
Pulse I/O Board	CQM1H-PLB21	Pulse inputs : 2 points (single-phase : 50 kHz or 25 kHz) Pulse outputs : 2 points (50 kHz) (fixed duty and variable duty factor supported)
Absolute Encoder Interface Board	CQM1H-ABB21	Absolute encoder (binary gray code) inputs : 2 points (4 kHz)
Analog Setting Board	CQM1H-AVB41	Analog settings: 4 settings
Analog I/O Board	CQM1H-MAB42	Analog inputs of 0 to 5V, 0 to 10V, −10 to +10V, or 0 to 20mA : 4 points Analog outputs of 0 to 20mA or -10 to +10V : 2 points
Serial Communications Board	CQM1H-SCB41	One RS-232C port and one RS-422A/485 port

■Input Units

Select from AC or DC Input Units with 8 to 32 input points.

CQM1 -ID221 CQM1 -ID212 CQM1 -ID213 CQM1 -IA121

Unit	Model number	Inputs	Input voltage	Circuit configuration
DC Input Units	CQM1-ID211	8 inputs	12 to 24 V DC	Independent commons
	CQM1-ID111	16 inputs	12 V DC	16 inputs/common
	CQM1-ID212	16 inputs	24 V DC	16 inputs/common
	CQM1-ID213	32 inputs	24 V DC	32 inputs/common
	CQM1-ID214	32 inputs	24 V DC	32 inputs/common
	CQM1-ID112	32 inputs	12 V DC	32 inputs/common
AC Input Units	CQM1-IA121	8 inputs	100 to 120 V AC	8 inputs/common
	CQM1-IA221	8 inputs	100 to 120 V AC	8 inputs/common

■Output Units

Select from contact outputs, transistor outputs, or triac outputs with 8 to 32 output points.

CQM1 -OC221 CQM1 -OD211 CQM1 -OD213 CQM1 -OA221

Unit	Model number	Outputs	Max. switching voltage	Circuit configuration
Contact Output Units	CQM1-OC221	8 outputs	250 V AC or 24 V DC	Independent commons
	CQM1-OC222	16 outputs		16 outputs/common
	CQM1-OC224	8 outputs		Independent commons
Transistor Output Units	CQM1-OD211	8 outputs	24 V DC	8 outputs/common
	CQM1-OD212	16 outputs	24 V DC	16 outputs/common
	CQM1-OD213	32 outputs	24 V DC	32 outputs/common
	CQM1-OD214	16 outputs	24 V DC PNP	16 outputs/common
	CQM1-OD215	8 outputs	24 V DC PNP	8 outputs/common
	CQM1-OD216	32 outputs	24 V DC PNP	32 outputs/common
Triac Output Units	CQM1-OA221	8 outputs	100 to 240 V AC	2 circuits with 4 outputs/common
	CQM1-OA222	6 outputs		1 circuit with 4 outputs/common, 1 circuit with 2 outputs/common

■I/O Expansion Units

CQM1H-IC101
I/O Control Unit

CQM1H-II101
I/O Interface Unit

■Dedicated I/O Units

CQM1-DA021 Analog Output Unit
Performs digital-to-analog conversion for two outputs.

CQM1-AD041 Analog Input Unit
Receives 4 analog voltage or current inputs into the CQM1H.

CQM1-IPS01/02 Analog Power Supply Units
Required to supply power when using an Analog Input Unit or Analog Output Unit.

CQM1-SRM21-V1 CompoBus/S Master Unit
A high-speed ON/OFF Remote I/O Master Unit that controls up to 128 I/O points. Also supports a long-distance communications mode.

CQM1-DRT21 DeviceNet I/O Link Unit
Operates as a DeviceNet slave to establish an I/O link of 32 I/O points with a DeviceNet Master.

CQM1-B7A□□ B7A Interface Units
Five Units are available that can connect with B7A Link Terminals.

CQM1-TC00□ CQM1-TC10□ CQM1-TC20□ CQM1-TC30□ Temperature Control Units
One Unit can receive data from two or four temperature control devices and is ideal for ON/OFF control.

CQM1-SF200 Safety Relay Unit
Monitors safety circuit status and allows space saving.

CPU Unit Descriptions

CQM1H CPU Units
CQM1H-CPU□□

CPU Units

The four models of CPU Units can be broadly divided into two groups: Models that support Inner Boards and the Controller Link Unit, and models that do not. The CPU Units also vary in their program capacities, I/O capacities, memory capacities, and the presence of an RS-232C port, as shown in the *Basic Specifications* table, below.

■ CPU Unit Overview

The following illustration shows the main components of a CQM1H-CPU61 CPU Unit.

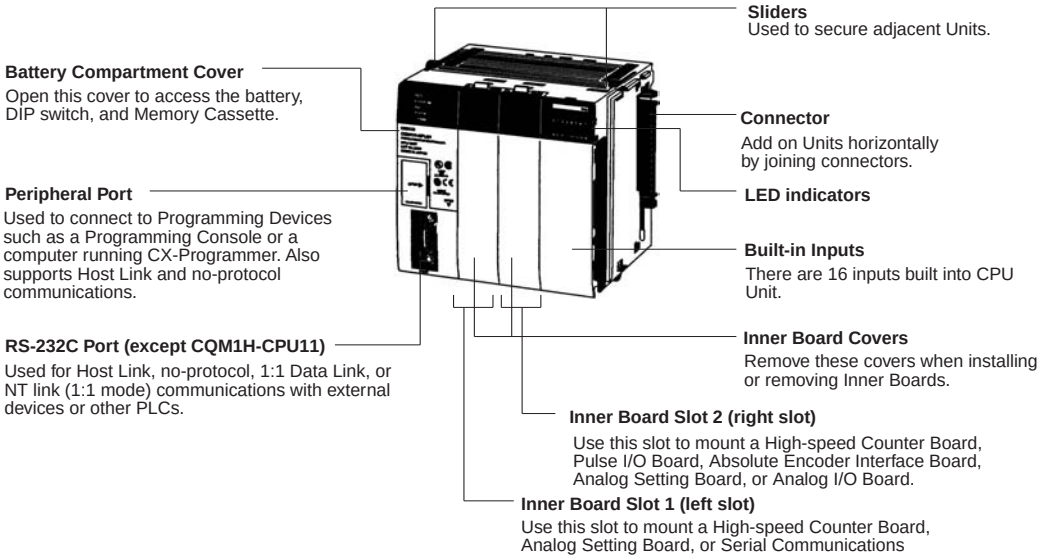

■ Basic Specifications

Model	I/O capacity (See note.)	Program capacity (words)	DM capacity (words)	EM capacity (words)	CPU Unit built-in inputs	Built-in serial ports		Inner Boards	Controller Link Unit
						Peripheral port	RS-232C port		
CQM1H-CPU61	512	15.2 K	6 K	6 K	DC: 16	Yes	Yes	Supported	
CQM1H-CPU51		7.2 K	6 K	None					
CQM1H-CPU21	256	3.2 K	3 K					Not supported	
CQM1H-CPU11							No		

Note: I/O capacity = Number of input points (≤ 256) + Number of output points (≤ 256).

■ Maximum Number of Units

CPU Unit	Controller Link Unit	Inner Boards	I/O Units and Dedicated I/O Units
CQM1H-CPU61	1 max.	2 max.	11 max. (total)
CQM1H-CPU51			
CQM1H-CPU21	Not supported.	Not supported.	
CQM1H-CPU11			

Power Supply Units and I/O Expansion Units

■ Power Supply Units

Both AC and DC Power Supply Units are available. The AC Power Supply Units require a power supply input from 100 to 240 V AC and two of the AC Power Supply Units are equipped with a 24-V DC power supply output.

The CQM1H's left End Cover is part of the Power Supply Unit.

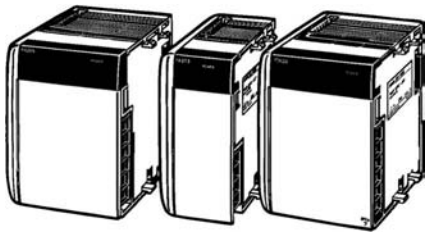

CQM1-PA206 CQM1-PA203 CQM1-PD026
CQM1-PA216

Specifications

Name	Model number	Specifications			
		Supply voltage	Operating voltage range	Output capacity	Service power supply
AC Power Supply Units	CQM1-PA203	100 to 240 V AC, 50/60 Hz (wide range)	85 to 265 V AC	5 V DC: 3.6 A (18 W)	None
	CQM1-PA206			5 V DC: 6 A 24 V DC: 0.5 A (30 W total, see note)	24 V DC: 0.5 A
	CQM1-PA216	100 or 230 V AC (selectable), 50/60 Hz		5 V DC: 6 A 24 V DC: 0.5 A (30 W total, see note)	
DC Power Supply Units	CQM1-PD026	24 V DC	20 to 28 V DC	30 W 5 V DC: 6 A	None

Note: The total power consumed at 5 V DC and 24 V DC must be less than 30 W.
$(5 \times \text{Current consumed at 5 V DC}) + (24 \times \text{Current consumed at 24 V DC}) \leq 30$ W

■ I/O Expansion Units

Use Expansion I/O Blocks to split the configuration into more than one group, allowing greater flexibility with mounting space as well as the use of at least 12 I/O Units or Dedicated I/O Units. Expansion Units can be used with any CQM1H CPU Unit.

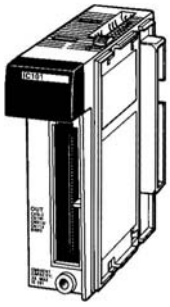

CQM1H-IC101

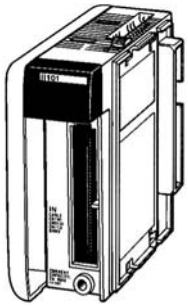

CQM1H-II101

Maximum Number of Units Mountable

CPU Unit model	CPU Block only	CPU Block + I/O Expansion Block			
	CPU Block	CPU Block			I/O Expansion Block
	I/O Units + Dedicated I/O Units	Controller Link Unit	Inner Boards	I/O Units + Dedicated I/O Units	I/O Units + Dedicated I/O Units
CQM1H-CPU61	11 Units max. (see note 1)	1 Unit	2 Boards max.	5 Units max. (see note 2)	11 Units max. (see note 3)
CQM1H-CPU51					
CQM1H-CPU21		Not supported	Not supported		
CQM1H-CPU11					

Note: 1. Ensure that the total current consumption of the mounted Units (CPU Unit, Controller Link Unit, Inner Boards, I/O Units, and Dedicated I/O Units)

2. Ensure that the total current consumption of the mounted Units (CPU Unit, Controller Link Unit, Inner Boards, I/O Units, Dedicated I/O Units, and I/O Control Units) does not exceed 3.0 A.

3. Ensure that the total current consumption of the mounted Units (I/O Interface Units, I/O Units, and Dedicated I/O Units) does not exceed 2.0 A.

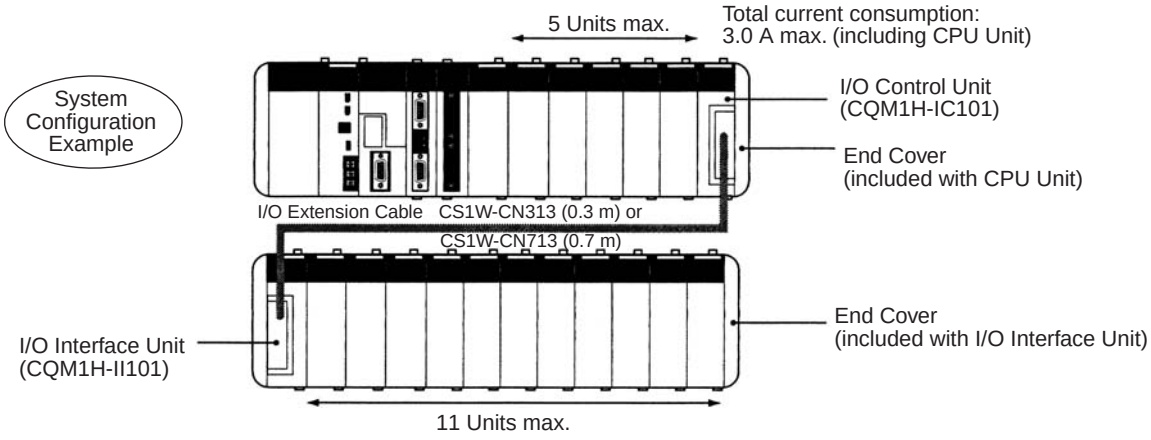

Total current consumption: 2.0 A max. (I/O Units and Dedicated I/O Units)

Memory Cassettes

An optional Memory Cassette can be used to store the user program, PLC Setup, and other data in ROM so that vital data will not be lost in the event of battery expiration or careless programming/monitoring operations.

If the PLC's settings need to be changed to execute another process, the entire software setup and user program can be changed just by exchanging the Memory Cassette and rebooting the PLC.

EEPROM:

CQM1-ME04K
CQM1-ME04R
CQM1-ME08K
CQM1-ME08R

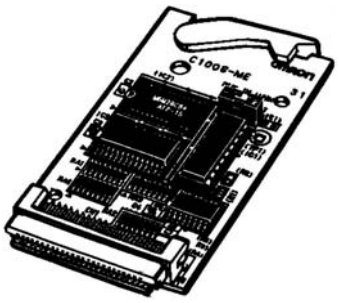

Flash Memory:

CQM1H-ME16K
CQM1H-ME16R

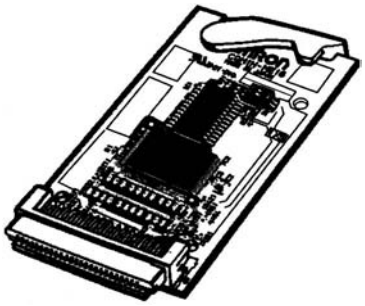

EPROM:

CQM1-MP08K
CQM1-MP08R

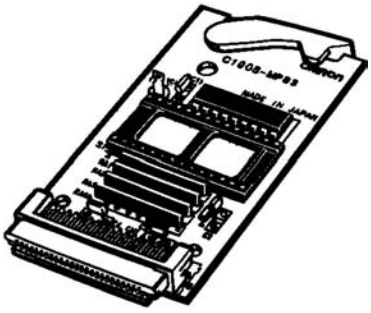

■ Available Memory Cassettes

The following Memory Cassettes are available.

Memory	Model	Specifications
EEPROM	CQM1-ME04K	4 Kwords without clock
	CQM1-ME04R	4 Kwords with clock
	CQM1-ME08K	8 Kwords without clock
	CQM1-ME08R	8 Kwords with clock
EPROM	CQM1-MP08K	Without clock (see below)
	CQM1-MP08R	With clock (see below)
Flash	CQM1H-ME16K	16 Kwords without clock
	CQM1H-ME16R	16 Kwords with clock

The following EPROM chips (sold separately) are required for EPROM Memory Cassettes.
The chip is mounted in the I/O socket on the Memory Cassette.

Model	ROM version	Capacity	Access speed
ROM-JD-B	27256 or equivalent	16 Kwords	150 ns
ROM-KD-B	27512 or equivalent	32 Kwords	150 ns

Specifications

■ General Specifications (Power Supplies and CPU Units)

Item	CQM1-PA203	CQM1-PA206	CQM1-PA216	CQM1-PD026
Supply voltage	100 to 240 V AC, 50/60 Hz		100 or 230 V AC (selectable), 50/60 Hz	24 V DC
Operating voltage range	85 to 264 V AC		85 to 132 V AC or 170 to 264 V AC	20 to 28 V DC
Operating frequency range	47 to 63 Hz			---
Power consumption	60 VA max.	120 VA max.		50 W max.
Inrush current	30 A max.			
Output capacity	5 V DC: 3.6 A (18 W)	5 V DC: 6 A 24 V DC: 0.5 A (30 W total)		5 V DC: 6 A (30 W)
Insulation resistance	20 MΩ min. (at 500 V DC) between AC external terminals and GR terminals (See note.)			
Dielectric strength	2,300 V AC 50/60 Hz for 1 min between AC external and GR terminals, leakage current: 10 mA max. (See note.) 1,000 V AC 50/60 Hz for 1 min between DC external and GR terminals, leakage current: 20 mA max. (See note.)			
Noise immunity	Conforms to IEC61000-4-4, 2 kV (power lines)			
Vibration resistance	10 to 57 Hz with an amplitude of 0.075 mm, and 57 to 150 Hz with an acceleration of 9.8 m/s^2 in the X, Y, and Z directions for 80 minutes each (i.e., swept for 8 minutes, 10 times).			
Shock resistance	147 m/s^2 (118 m/s^2 for Contact Output Units) 3 times each in X, Y, and Z directions			
Ambient temperature	Operating: 0 to 55 °C Storage: –20 to 75 °C (except battery)			
Ambient operating humidity	10% to 90% (no condensation)			
Operating environment	No corrosive gas			
Ground	Less than 100 Ω			
Construction	Panel mounted			
Weight	5 kg max.			
Internal current consumption	CQM1H-CPU11: 820 mA max. at 5 V DC CQM1H-CPU21/51/61: 840 mA max. at 5 V DC			
Dimensions (without cables)	CQM1H-CPU11/21: 187 to 571 × 110 × 107 mm (W×H×D) CQM1H-CPU51/61: 187 to 603 × 110 × 107 mm (W×H×D)			
Accessories	RS-232C connector (one XM2A-0901 Plug and one XM2S-0911-E Hood) (except CQM1H-CPU11) CPM2A-BAT01 Battery Set (installed in CPU Unit when shipped)			

Note: Disconnect the Power Supply Unit's LG terminal from the GR terminal when testing insulation and dielectric strength. Repeatedly testing the insulation and dielectric strength with the LG terminal and the GR terminals connected will damage internal circuits in the CPU Unit.

■ CPU Unit Specifications

Characteristics

Item		Specifications
Control method		Stored program method
I/O control method		Cyclic scan and direct output/immediate interrupt processing
Programming language		Ladder-diagram programming
I/O capacity		CQM1H-CPU11/21: 256 CQM1H-CPU51/61: 512
Program capacity		CQM1H-CPU11/21: 3.2 Kwords CQM1H-CPU51: 7.2 Kwords CQM1H-CPU61: 15.2 Kwords
Data memory capacity		CQM1H-CPU11/21: 3 Kwords CQM1H-CPU51: 6 Kwords CQM1H-CPU61: 12 Kwords (DM: 6 Kwords; EM: 6 Kwords)
Instruction length		1 step per instruction, 1 to 4 words per instruction
Number of instructions		162 (14 basic, 148 special instructions)
Instruction execution times		Basic instructions: 0.375 to 1.125 μs Special instructions: 17.7 μs (MOV instruction)
Overseeing time		0.70 ms
Mounting structure		No Backplane (Units are joined horizontally using connectors)
Mounting		DIN Track mounting (screw mounting not possible)
CPU Unit built-in DC input points		16
Maximum number of Units		CPU Block only: 11 Units (I/O Units and Dedicated I/O Units) max. CPU Block and Expansion I/O Block CPU Block: 5 Units max. Expansion I/O Block: 11 Units max.
Inner Boards		CQM1H-CPU11/21: None CQM1H-CPU51/61: 2 Boards
Communications Units (Controller Link Unit)		CQM1H-CPU11/21: None CQM1H-CPU51/61: 1 Unit
Types of interrupts	Input interrupts (4 inputs max.)	Input Interrupt Mode: Interrupts are executed in response to inputs from external sources to the CPU Unit's built-in input points. Counter Mode: Interrupts are executed in response to reception of a set number of pulses (counted down) via the CPU Unit's internal built-in input points (4 points).
	Interval timer interrupts (3 timers max.)	Scheduled Interrupt Mode: Program is interrupted at regular intervals measured by one of the CPU Unit's internal timers. One-shot Interrupt Mode: An interrupt is executed after a set time, measured by one of the CPU Unit's internal timers.
	High-speed counter interrupts	Target Value Comparison: Interrupt is executed when the high-speed counter PV is equal to a specified value. Range Comparison: Interrupt is executed when the high-speed counter PV lies within a specified range. **Note:** Counting is possible for high-speed counter inputs from the CPU Unit's internal input points, Pulse I/O Boards, or Absolute Encoder Interface Boards. (The High-speed Counter Board has no interrupt function, but can output bit patterns internally and externally.)
I/O allocations		I/O is automatically allocated in order from the Unit nearest to the CPU Unit. (Because there are no I/O tables, it is not necessary, and not possible, to create I/O tables from a Programming Device.)

Note: Analog Power Supply Units must also be counted.

Memory Area Structure

Data area		Size	Words	Bits	Function
IR area	Input area	256 bits	IR 000 to IR 015	IR 00000 to IR 01515	Input bits are allocated to Input Units or Dedicated I/O Units. The 16 bits in IR 000 are always allocated to the CPU Unit's built-in inputs. Bits in IR 001 to IR 015 are allocated to I/O or Dedicated I/O Units connected to the CPU Unit.
	Output area	256 bits	IR 100 to IR 115	IR 10000 to IR 11515	Output bits are allocated to Output Units or Dedicated I/O Units connected to the CPU Unit.
	Work areas	2,528 bits min.	IR 016 to IR 089	IR 01600 to IR 08915	Work bits do not have any specific function and they can be freely used within the program. (A minimum 2,528 bits are available as work bits. Most bits in the IR and LR areas can be used as work bits when they are not used for their allocated functions, so the total number of available work bits depends on the configuration of the PLC.)
			IR 116 to IR 189	IR 11600 to IR 18915	
			IR 216 to IR 219	IR 21600 to IR 21915	
			IR 224 to IR 229	IR 22400 to IR 22915	
Controller Link status areas		96 bits	IR 090 to IR 095	IR 09000 to IR 09515	Status Area 1: Stores the Controller Link data link status information.
		96 bits	IR 190 to IR 195	IR 19000 to IR 19515	Status Area 2: Stores the Controller Link error and network participation information.
MACRO operand area	Input area	64 bits	IR 096 to IR 099	IR 09600 to IR 09915	Used when the MACRO instruction, MCRO(99), is used.
	Output area	64 bits	IR 196 to IR 199	IR 19600 to IR 19915	
Inner Board slot 1 area		256 bits	IR 200 to IR 215	IR 20000 to IR 21515	These bits are allocated to the Inner Board mounted in slot 1 of a CQM1H-CPU51/61. High-speed Counter Board: IR 200 to IR 213 Serial Communications Board: IR 200 to IR 207
Analog settings area		64 bits	IR 220 to IR 223	IR 22000 to IR 22315	Used to store the analog settings when a CQM1H-AVB41 Analog Setting Board is mounted.
High-speed Counter 0 PV		32 bits	IR 230 to IR 231	IR 23000 to IR 23115	Used to store the present values of high-speed counter 0.
Inner Board slot 2 area		192 bits	IR 232 to IR 243	IR 23200 to IR 24315	These bits are allocated to the Inner Board mounted in slot 2. High-speed Counter Board: IR 232 to IR 243 Absolute Encoder Interface Board: IR 232 to IR 239 Pulse I/O Board: IR 232 to IR 239 Analog I/O Board: IR 232 to IR 239
SR area		184 bits	SR 244 to SR 255	SR 24400 to SR 25507	These bits serve specific functions such as flags and control bits.
HR area		1,600 bits	HR 00 to HR 99	HR 0000 to HR 9915	These bits store data and retain their ON/OFF status when power is turned OFF or when the operating mode is changed.
AR area		448 bits	AR 00 to AR 27	AR 0000 to AR 2715	These bits serve specific functions such as flags and control bits.
TR area		8 bits	---	TR 0 to TR 7	These bits are used to temporarily store ON/OFF status at program branches.
LR area		1,024 bits	LR 00 to LR 63	LR 0000 to LR 6315	Used for 1:1 data link through the RS-232 port or through a Controller Link Unit.
Timer/Counter area		512 bits	TIM/CNT 000 to TIM/CNT 511 (timer/counter numbers)		The same numbers are used for both timers and counters. Timer numbers 000 to 015 can be used with TIMH(15) for interrupt-refreshed PVs to ensure proper timing without inaccuracy being caused by the cycle time.

Data area		Size	Words	Bits	Function
DM area	Read/ write	3,072 words	DM 0000 to DM 3071	---	DM area data can be accessed in word units only. Word values are retained when the power is turned OFF.
		3,072 words	DM 3072 to DM 6143	---	Available in CQM1H-CPU51/61 CPU Units only.
	Read-only[4]	425 words	DM 6144 to DM 6568	---	Cannot be written from the program (only from a Programming Device). DM 6400 to DM 6409: Controller Link parameters DM 6450 to DM 6499: Routing tables DM 6550 to DM 6559: Serial Communications Board Setup
	Error history area[4]	31 words	DM 6569 to DM 6599	---	Cannot be written from the program (only from a Programming Device). Stores the time of occurrence and error code of errors that occur.
	PLC Setup[4]	56 words	DM 6600 to DM 6655	---	Cannot be written from the program (only from a Programming Device). Stores various parameters that control PLC operation.
EM area		6,144 words	EM 0000 to EM 6143	---	EM area data can be accessed in word units only. Word values are retained when the power is turned OFF or the operating mode is changed. (CQM1H-CPU61 CPU Unit only.)

Memory Cassette Specifications

Item	Details
Memory Cassette (EEPROM or flash memory)	Mounted from the front of the CPU Unit and used to store and read the user's program, DM (read-only DM and PLC Setup), and expansion instruction information as one block. It is possible to set the CPU Unit so that data stored in the Memory Cassette (user's program, DM, expansion instruction information) is automatically sent to the CPU Unit (autoboot) at startup. Transfer and comparison of data between the CPU Unit and Memory Cassette are possible using AR area control bits.

Other Functions

Item	Specification
Macro instructions	Subroutines called by instructions containing arguments.
Min. cycle time	1 to 9,999 ms (Unit: 1 ms)
Cycle time monitoring	When the cycle time exceeds 100 ms, the Cycle Time Over Flag turns ON, and operation continues. (A setting can be made in the PLC Setup so that this error is not generated.) When the cycle time exceeds the cycle monitor time, operation is stopped. Cycle monitor time settings: 0 to 990 ms in 10-ms units, 0 to 9,900 ms in 100-ms units, 0 to 99 s in 1-s units. **Note:** The maximum and current values of the cycle time are stored in the AR area.
I/O refreshing	Cyclic refreshing, refreshing by IORF(97), direct output refreshing (set in the PLC Setup), interrupt input refreshing. (The inputs that are refreshed can be set separately for input interrupts, high-speed counter interrupts, and interval timer interrupts in the PLC Setup.)
I/O memory status when changing operating mode	Depends on the ON/OFF status of the I/O Hold Bit (SR 25212).
Load OFF	All outputs on Output Units can be turned OFF when the CPU Unit is operating in RUN, MONITOR, or PROGRAM mode. (Used for stopping output in emergencies, for debugging, etc.)
User-customized DIP switch setting	A pin setting on the DIP switch on the front of the CPU Unit is stored in AR 0712. This setting can be used as an ON/OFF condition (e.g., to switch between trial operation and actual operation).
Mode setting at power-up	Possible
Debugging	Forced set/reset, differential monitoring, data tracing (scheduled, cyclic, or when instruction is executed).
Online editing	User programs can be overwritten in program-block units when the CPU Unit is in MONITOR mode. With the CX-Programmer, more than one program block can be edited at the same time.
Program protection	Write-protection of user program and data memory (DM 6144 to DM 6655: read-only DM): Set using pin 1 of the DIP switch.
Error check	User-defined errors (i.e., user can define fatal errors and non-fatal errors using the FAL(06) and FALS(07) instructions.) (It is possible to stop operation using FALS(07) for fatal errors. User-defined error logs can be created in specific bits (logging) when using FAL(06).
Error log	Up to 10 errors (including user-defined errors) are stored in the error log. Information includes the error code, error details, and the time the error occurred.

Item	Specification			
Serial communications	Built-in peripheral port: Programming Device (including Programming Console) connections, Host Links, no-protocol communications Built-in RS-232C port: Programming Device (excluding Programming Console) connections, Host Links, no-protocol communications, NT Links (1:1 mode), 1:1 Data LInks			
	RS-232C port and RS-422A/485 port on Serial Communications Board (sold separately): Programming Device (excluding Programming Console) connections, Host Links, no-protocol communications, NT Links (1:1 mode, 1:N mode), 1:1 Data LInks, protocol macros			
Serial communications modes	CQM1H CPU Unit's built-in port	Built-in peripheral port	Built-in RS-232C port	Serial Communications Board ports
Programming Console bus	Connects to Programming Console.	YES (pin 7 OFF)	No	No
Peripheral bus	Connects to a computer running CX-Programmer or other Support Software. (Automatically used if the network type is set to peripheral bus on the Support Software.)	YES (pin 7 ON)	No	No
Host Link (SYSMAC WAY)	Enables reading/writing CPU Unit I/O memory or program using Host Link commands. Computers running Support Software or OMRON Programmable Terminals can also be connected. PLC-initiated communications are possible.	YES (pin 7 ON)	YES	YES
No-protocol	Enables sending or receiving up to 256 bytes of data without a protocol or data conversion. A start code, end code, and transmission delay can be set.	YES (pin 7 ON)	YES	YES
1:1 data link	Enables 1:1 data link with a CQM1H, CQM1, CPM-series, C200HX/HG/HE, C200HS, or SRM1 PLC.	No	YES	YES
NT links (1:1 and 1:N)	Enables 1:1 or 1:N communications with OMRON Programmable Terminals without additional programming.	No	YES (1:1 only)	YES (1:1 and 1:N)
Protocol macros	Enables user-created protocols to communicate with essential any device equipped with a serial communications port (e.g., RS-232C). Standard protocols are also provided.	No	No	YES
Clock	Some Memory Cassette are equipped with a clock. (The time of the error will recorded if a clock is used.			
Input time constants	Used to set the ON (or OFF) response times for DC Input Units. Settings: 1, 2, 4, 8, 16, 32, 64, and 128 ms.			
Power OFF detection time	AC power supply: 10 to 25 ms (not fixed), DC power supply: 5 to 25 ms (not fixed)			
Memory protection	Held Areas: Holding bits, contents of Data Memory and Extended Data Memory, and status of the counter Completion Flags and present values. **Note:** If the I/O Hold Bit (SR 25212) is turned ON, and the PLC Setup is set to maintain the I/O Hold Bit status when power is turned ON, the contents of the IR area and the LR area will be saved.			
Commands to a host computer	Host Link command responses can be sent to a computer connected via the Host Link System using the TXD(—) (communications port output) instruction.			
Remote programming and monitoring	Host Link or peripheral bus communications via a CPU Unit's serial communications port can be used for remote programming and remote monitoring of the PLC through a Controller Link System. (This function is, however, not supported for the serial communications ports on the Serial Communications Board.)			
Program check	Program is checked at the beginning of operation for items such as no END(01) instruction and instruction errors. CX-Programmer can also check programs. (The level of program checking can be set.)			
Battery life	5 years at 25°C (Depends on the ambient temperature and power supply conditions. Min.: 1 yr) Battery replacement must be performed within 5 minutes.			
Errors from self-diagnostics	CPU (watchdog timer), I/O verification, I/O bus, memory, FALS system (FALS execution or cycle monitor time over), FAL system (FAL execution or PLC Setup error etc.), battery, cycle time over and communications port.			
Other functions	Storage of number of times power has been interrupted. (Stored in AR area.)			

I/O Functions

■ Interrupt Input Processing

All CQM1H CPU Units are equipped with four inputs (IR 00000 to IR 00003) that can be used as interrupt inputs. Interrupt processing can be enabled and disabled with the INTERRUPT CONTROL – INT(89) instruction.

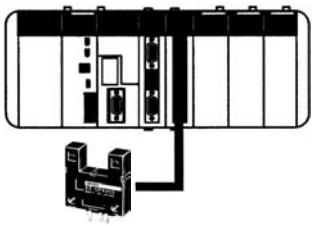

Photomicrosensor etc.

Sample Program

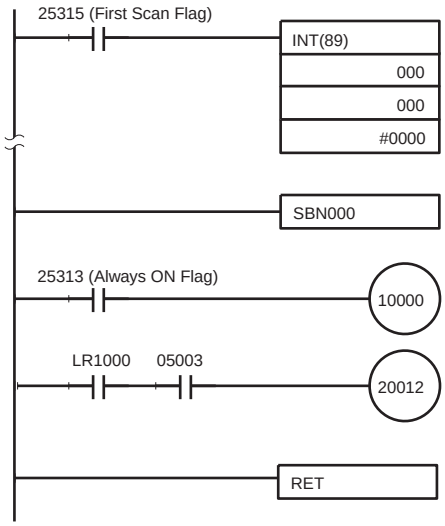

In order for interrupt input processing to be performed, the INTERRUPT CONTROL – INT(89) instruction is set so that interrupt processing is enabled when IR 00000 goes ON.

When the external signal to IR 00000 goes from OFF to ON, program execution is temporarily halted, and processing moves to subroutine 00.

When subroutine 000 (SBN000) is completed, its results are output immediately. The entire interrupt process, from IR 00000 going ON to the refreshing of outputs IR 10000 and IR 20012, provides high-speed I/O response that is not affected by the PLC's cycle time.

■ Interval Timer Interrupt Processing

The INTERVAL TIMER – STIM(69) instruction is useful for performing repetitive processes, such as output processing, that need to be performed regularly at intervals shorter than the cycle time.

Place an STIM(69) instruction in the program to define a timer that will call and execute a subroutine at regular intervals. Up to 3 interval timers can be used.

Sample Program

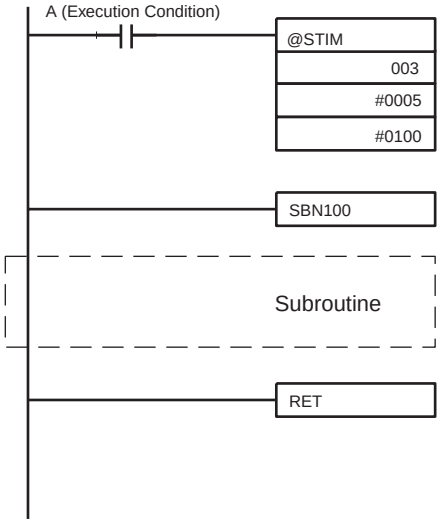

The STIM(69) instruction is used to control an interval timer. In this example, timer 0 is started in repetitive mode.

As long as A (the execution condition) is ON, the main program will be halted and the interrupt routine SBN100 will executed every 5 ms (i.e., each time the interval timer times out). Main program execution is continued when interrupt routine execution has been completed.

Various I/O Functions

■ Internal High-speed Counters

Pulses from a rotary encoder can be input directly into 3 of the CPU Unit's inputs (IN04, IN05, and IN06) and used as internal high-speed counter.
Pulses can be counted from 0 to 65535 in the increment mode and –32767 to 32767 in the up/down mode, with a single-phase response speed of 5 KHz and a two-phase response speed of 2.5 KHz.

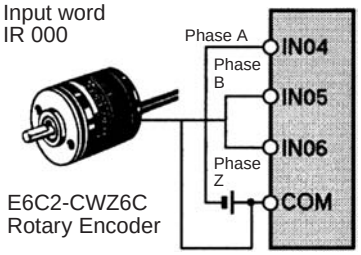

The high-speed counter's input mode is set in the DM Area's PLC Setup.

Input Modes

Up/Down mode	Uses phase A and phase B to count up and down.
Increment mode	Uses phase A only to count up.
Normal mode	Input bit 04 to bit 06 are used as normal inputs.

Reset Method

There are two ways to reset the counter's PV. The PV can be reset by the software reset alone or by a logical AND between the phase-Z input and the software reset.

Comparison Conditions

Target value	Up to 16 target values can be set. The specified subroutine will be executed when the count value reaches a target value.
Zone comparison	Up to 8 zones (upper/lower limits) can be set. The specified subroutine will be executed when the count value is within a zone.

■ Pulse Output - PULS(65) and Change Frequency - SPED(64)

These instructions are used to control pulse outputs. They can greatly simplify tasks such as controlling step motors from the CQM1H.

Example

In this example, the speed of a step motor is changed.

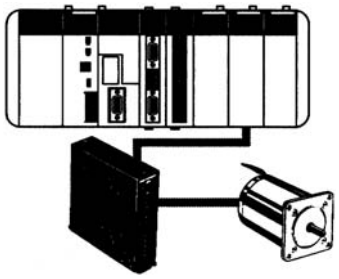

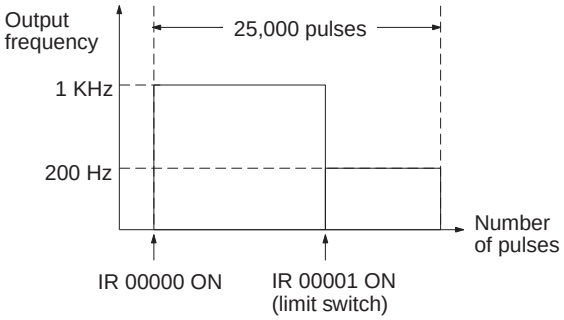

Sample Program

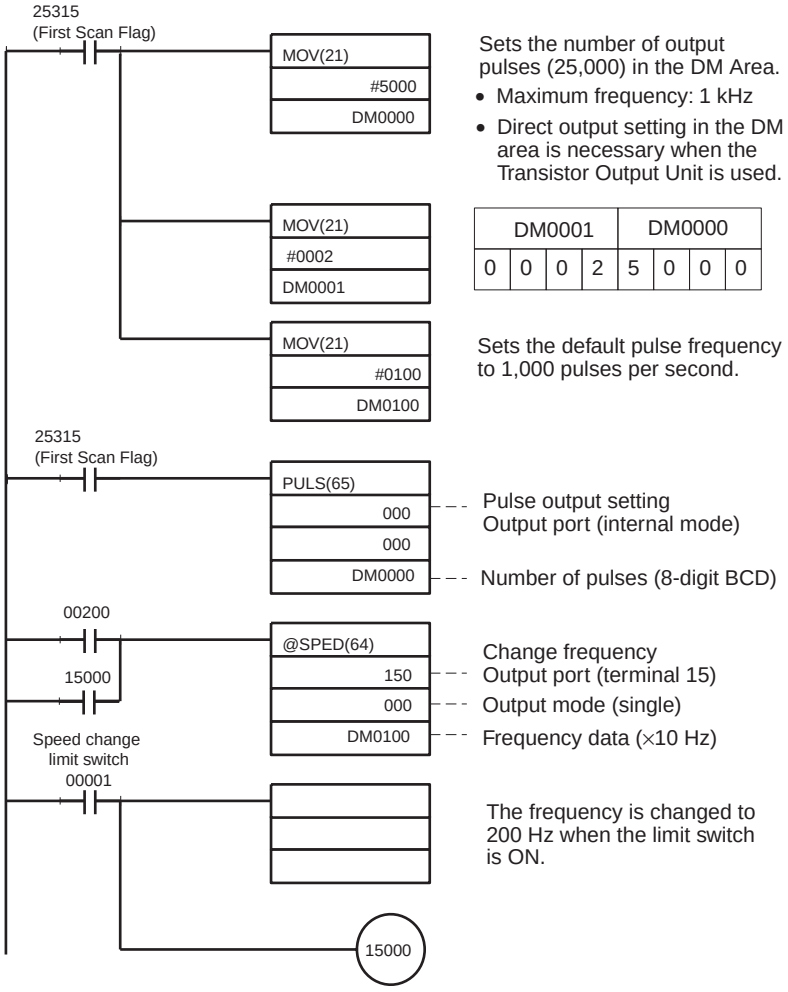

I/O Memory Allocation

I/O words are allocated to I/O Units according to a fixed location. When the I/O Units and Dedicated I/O Units are connected, the I/O words will be allocated as described next.

Input Word Allocation

IR 000 to IR 015 are allocated as input bits. The first input word (IR 000), however, is allocated to the CPU Unit's 16 built-in input points.

Note: Built-in CPU Unit's inputs are used for interrupt processing and built-in high-speed counter inputs.

Output Word Allocation

IR 100 to IR 115 are allocated as output bits. When Output Units or Dedicated I/O Units are connected, words will be allocated in order starting from IR 100.

Unit		I/O word allocation		
		Input words	Output words	
Input Units		1 or 2	---	Each 8-point or 16-point Input Unit is allocated one input word and each 32-point Input Unit is allocated two input words. Words will be allocated in order starting from IR 001.
Output Units		---	1 or 2	Each 8-point or 16-point Output Unit is allocated one output word and each 32-point Output Unit is allocated two output words. Words will be allocated in order starting from IR 100.
Sensor Units		1	---	Each Sensor Unit is allocated one input word. Bits 00 through 03 are allocated in order from the top to a maximum of four modules. All other bits can be used as work bits in programming.
B7A Interface Units	B7A02	---	1	Depending on the Unit, each B7A Interface Unit is allocated input words and output words.
	B7A12	1	---	
	B7A03	---	1	
	B7A13	2	---	
	B7A21	1	1	
DeviceNet I/O Link Unit		1	1	Each DeviceNet I/O Link Unit is allocated one input word and one output word.
CompoBus/S Master Units	IN:16 points OUT: 16 points	1	1	Depending on the Unit, each CompoBus/S Master Unit is allocated input words and output words.
	IN: 32 points OUT: 32 points	2	2	
	IN: 64 points OUT: 64 points	4	4	
Analog Input Unit		2 or 4	---	Each Analog Input Unit can be set to input either 2 or 4 points. If the Unit is set to input 2 points, two input words are allocated. If the Unit is set to input 4 points, four input words are allocated.
Analog Output Unit		---	2	Each Analog Output Unit is allocated two output words.
Analog Power Supply Units		---	---	Power Supply Units are not involved directly in I/O operations and are thus not allocated I/O words.
Temperature Control Units	00□/10□	2 or 1	2 or 1	Each Temperature Control Unit is allocated two input words and two output words when two loops are used. Only one input word and one output word are allocated when one loop is used.
	20□/30□	1	1	One input word and one output word are allocated in the order the Unit is connected.
Safety Relay Unit		1	---	One input word is allocated per Unit in the order the Unit is connected.

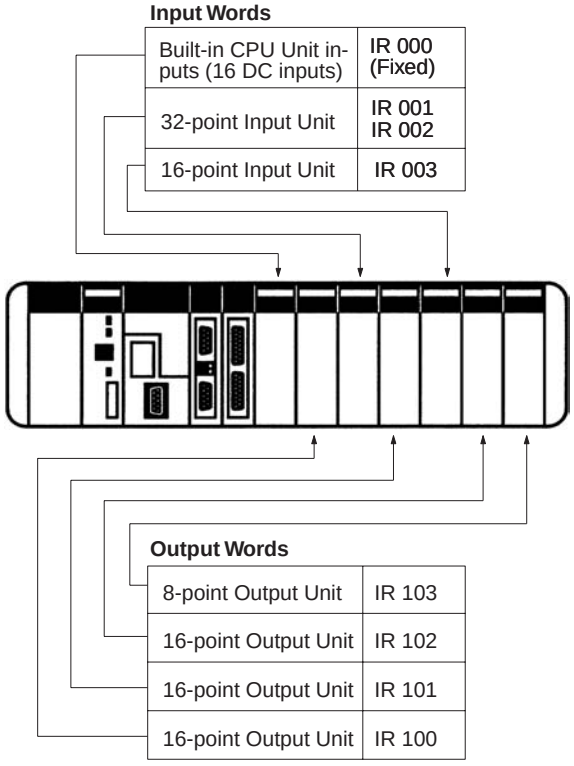

I/O Units

The number of I/O Units that can be connected depends on the CPU Unit being used.

CQM1H-CPU11/CPU21

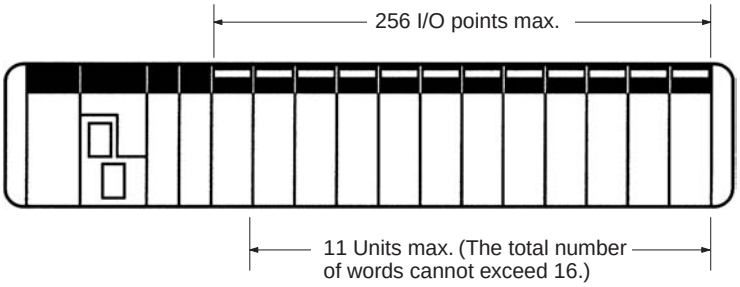

CQM1H-CPU51/CPU61

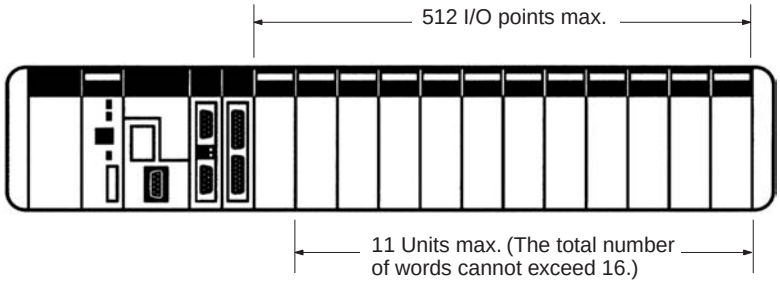

Instructions

■ Sequence Instructions

Sequence Input Instructions

Name	Mnemonic	Code
LOAD	LD	Note 1.
LOAD NOT	LD NOT	
AND	AND	
AND NOT	AND NOT	
OR	OR	
OR NOT	OR NOT	
AND LOAD	AND LD	
OR LOAD	OR LD	

Sequence Output Instructions

Name	Mnemonic	Code
OUTPUT	OUT	Note 1.
OUT NOT	OUT NOT	Note 1.
KEEP	KEEP	11
DIFFERENTIATE UP	DIFU	13
DIFFERENTIATE DOWN	DIFD	14
SET	SET	Note 1.
RESET	RSET	Note 1.

Sequence Control Instructions

Name	Mnemonic	Code
END	END	01
NO OPERATION	NOP	00
INTERLOCK	IL	02
INTERLOCK CLEAR	ILC	03
JUMP	JMP	04
JUMP END	JME	05

■ Timer/Counter Instructions

Name	Mnemonic	Code
TIMER	TIM	Note 1.
HIGH-SPEED TIMER	TIMH	15
TOTALIZING TIMER	TTIM	Note 2/3.
COUNTER	CNT	Note 1.
REVERSIBLE COUNTER	CNTR	12

■ Data Comparison Instructions

Name	Mnemonic	Code
COMPARE	CMP	20
DOUBLE COMPARE	CMPL	(60: Note 2)
SIGNED BINARY COMPARE	CPS	Note 2.
SIGNED BINARY DOUBLE COMPARE	CPSL	Note 2.
MULTI-WORD COMPARE	(@)MCMP	(19: Note 2)
TABLE COMPARE	(@)TCMP	85
BLOCK COMPARE	(@)BCMP	(68: Note 2)
RANGE COMPARE	ZCP	Note 2
RANGE DOUBLE COMPARE	ZCPL	Note 2

■ Data Movement Instructions

Name	Mnemonic	Code
MOVE	(@)MOV	21
MOVE NOT	(@)MVN	22
MOVE BIT	(@)MOVB	82
MOVE DIGIT	(@)MOVD	83
MULTIPLE BIT TRANSFER	(@)XFRB	Note 2.
BLOCK TRANSFER	(@)XFER	70
BLOCK SET	(@)BSET	71
DATA EXCHANGE	(@)XCHG	73
SINGLE WORD DISTRIBUTE	(@)DIST	80
DATA COLLECT	(@)COLL	81

■ Data Shift Instructions

Name	Mnemonic	Code
SHIFT REGISTER	SFT	10
REVERSIBLE SHIFT REGISTER	(@)SFTR	84
ONE DIGIT SHIFT LEFT	(@)SLD	74
ONE DIGIT SHIFT RIGHT	(@)SRD	75
ASYNCHRONOUS SHIFT REGISTER	(@)ASFT	(17: Note 2)
WORD SHIFT	(@)WSFT	16
ARITHMETIC SHIFT LEFT	(@)ASL	25
ARITHMETIC SHIFT RIGHT	(@)ASR	26
ROTATE LEFT	(@)ROL	27
ROTATE RIGHT	(@)ROR	28

■ Increment/Decrement Instructions

Name	Mnemonic	Code
INCREMENT	(@)INC	38
DECREMENT	(@)DEC	39

Note: 1. Input via Programming Console Key.

2. Expansion instruction (function code set before programming).

3. New (i.e., not supported by CQM1).

4. Supported by CQM1H CPU Units with lot number 0160 (June 1, 2000) or later.

■ Arithmetic Instructions

Name	Mnemonic	Code
BCD ADD	(@)ADD	30
BCD SUBTRACT	(@)SUB	31
DOUBLE BCD ADD	(@)ADDL	54
DOUBLE BCD SUBTRACT	(@)SUBL	55
BINARY ADD	(@)ADB	50
BINARY SUBTRACT	(@)SBB	51
BINARY DOUBLE ADD	(@)ADBL	Note 2.
BINARY DOUBLE SUBTRACT	(@)SBBL	Note 2.
BCD MULTIPLY	(@)MUL	32
DOUBLE BCD MULTIPLY	(@)MULL	56
BINARY MULTIPLY	(@)MLB	52
SIGNED BINARY MULTIPLY	(@)MBS	Note 2.
SIGNED BINARY DOUBLE MULTIPLY	(@)MBSL	Note 2.
BCD DIVIDE	(@)DIV	33
DOUBLE BCD DIVIDE	(@)DIVL	57
BINARY DIVIDE	(@)DVB	53
SIGNED BINARY DIVIDE	(@)DBS	Note 2.
SIGNED BINARY DOUBLE DIVIDE	(@)DBSL	Note 2.

■ Data Conversion Instructions

Name	Mnemonic	Code
BCD TO BINARY	(@)BIN	23
DOUBLE BCD TO DOUBLE BINARY	(@)BINL	58
BINARY TO BCD	(@)BCD	24
DOUBLE BINARY TO DOUBLE BCD	(@)BCDL	59
2'S COMPLEMENT CONVERT	(@)NEG	Note 2
2'S COMPLEMENT DOUBLE CONVERT	(@)NEGL	Note 2
4 TO 16 DECODER	(@)MLPX	76
16 TO 4 ENCODER	(@)DMPX	77
ASCII CODE CONVERT	(@)ASC	86
ASCII TO HEXADECIMAL	(@)HEX	Note 2
COLUMN TO LINE	(@)LINE	Note 2
LINE TO COLUMN	(@)COLM	Note 2

■ Logic Instructions

Name	Mnemonic	Code
LOGICAL AND	(@)ANDW	34
LOGICAL OR	(@)ORW	35
EXCLUSIVE OR	(@)XORW	36
EXCLUSIVE NOR	(@)XNRW	37
COMPLEMENT	(@)COM	29

■ Special Math Instructions

Name	Mnemonic	Code
ARITHMETIC PROCESS	(@)APR	Note 2
BIT COUNTER	(@)BCNT	(67: Note 2)
SQUARE ROOT	(@)ROOT	72

■ Floating-point Math and Conversion Instructions

Name	Mnemonic	Code
FLOATING TO 16-BIT	(@)FIX	Note 2/3
FLOATING TO 32-BIT	(@)FIXL	
16-BIT TO FLOATING	(@)FLT	
32-BIT TO FLOATING	(@)FLTL	
FLOATING-POINT ADD	(@)+F	
FLOATING-POINT SUBTRACT	(@)–F	
FLOATING-POINT MULTIPLY	(@)*F	
FLOATING-POINT DIVIDE	(@)/F	
DEGREES TO RADIANS	(@)RAD	
RADIANS TO DEGREES	(@)DEG	
SINE	(@)SIN	
COSINE	(@)COS	
TANGENT	(@)TAN	
ARC SINE	(@)ASIN	
ARC COSINE	(@)ACOS	
ARC TANGENT	(@)ATAN	
SQUARE ROOT	(@)SQRT	
EXPONENT	(@)EXP	
LOGARITHM	(@)LOG	

■ Table Data Instructions

Name	Mnemonic	Code
DATA SEARCH	(@)SRCH	Note 2
FIND MAXIMUM	(@)MAX	
FIND MINIMUM	(@)MIN	
SUM CALCULATE	(@)SUM	
FCS CALCULATE	(@)FCS	

■ Data Control Instructions

Name	Mnemonic	Code
PID CONTROL	PID	Note 2
SCALE	(@)SCL	(66: Note 2)
SCALE 2	(@)SCL2	Note 2
SCALE 3	(@)SCL3	Note 2
AVERAGE VALUE	AVG	Note 2

Note: 1. Input via Programming Console Key.

2. Expansion instruction (function code set before programming).

3. New (i.e., not supported by CQM1).

4. Supported by CQM1H CPU Units with lot number 0160 (June 1, 2000) or later.

■ Subroutine Instructions

Name	Mnemonic	Code
SUBROUTINE ENTER	(@)SBS	91
SUBROUTINE ENTRY	SBN	92
SUBROUTINE RETURN	RET	93
MACRO	(@)MCRO	99

■ Interrupt Instructions

Name	Mnemonic	Code
INTERRUPT CONTROL	(@)INT	(89: Note 2)
INTERVAL TIMER	(@)STIM	(69: Note 2)

■ High-speed Counter and Pulse Output Instructions

Name	Mnemonic	Code
MODE CONTROL	(@)INI	(61: Note 2)
PV READ	(@)PRV	(62: Note 2)
COMPARE TABLE LOAD	(@)CTBL	(63: Note 2)
SET PULSE	(@)PULS	(65: Note 2)
CHANGE FREQUENCY	(@)SPED	(64: Note 2)
FREQUENCY CONTROL	(@)ACC	Note 2
POSITIONING	(@)PLS2	Note 2
PWM OUTPUT	(@)PWM	Note 2

■ Step Instructions

Name	Mnemonic	Code
STEP DEFINE	STEP	08
STEP START	SNXT	09

■ I/O Unit Instructions

Name	Mnemonic	Code
I/O REFRESH	(@)IORF	97
7-SEGMENT DECODER	(@)SDEC	78
7-SEGMENT DISPLAY OUTPUT	7SEG	(88: Note 2)
DIGITAL SWITCH	DSW	(87: Note 2)
TEN KEY INPUT	(@)TKY	(18: Note 2)
HEXADECIMAL KEY INPUT	HKY	Note 2

■ Serial Communications Instructions

Name	Mnemonic	Code
PROTOCOL MACRO	(@)PMCR	Note 2/3
TRANSMIT	(@)TXD	(48: Note 2)
RECEIVE	(@)RXD	(47: Note 2)
CHANGE SERIAL PORT SETUP	(@)STUP	Note 2/3

■ Network Communications Instructions

Name	Mnemonic	Code
NETWORK SEND	(@)SEND	90 (Note 3)
NETWORK RECEIVE	(@)RECV	98 (Note 3)
DELIVER COMMAND	(@)CMND	Note 2/3

■ Message Instructions

Name	Mnemonic	Code
MESSAGE	(@)MSG	46

■ Clock Instructions

Name	Mnemonic	Code
HOURS TO SECONDS	(@)SEC	Note 2
SECONDS TO HOURS	(@)HMS	Note 2

■ Debugging Instructions

Name	Mnemonic	Code
TRACE MEMORY SAMPLE	TRSM	45

■ Diagnostic Instructions

Name	Mnemonic	Code
FAILURE ALARM	(@)FAL	06
SEVERE FAILURE ALARM	FALS	07
FAILURE POINT DETECT	FPD	Note 2

■ Carry Flag Instructions

Name	Mnemonic	Code
SET CARRY	(@)STC	40
CLEAR CARRY	(@)CLC	41

■ Temperature Control Unit Instructions

Name	Mnemonic	Code
TRANSFER I/O COMMAND	IOTC	Note 2/4

Note: 1. Input via Programming Console Key.

2. Expansion instruction (function code set before programming).

3. New (i.e., not supported by CQM1).

4. Supported by CQM1H CPU Units with lot number 0160 (June 1, 2000) or later.

I/O Specifications

■ Input Specifications

All of the Input Units listed in the following tables have photocoupler isolation and LED input indicators.

CPU Units

Number of inputs	Input voltage	Input current	Input impedance	Operating voltage		Response times		External connection	Inputs/ common	Current consumption (5 V DC)	Weight
				ON voltage	OFF voltage	ON delay	OFF delay				
16 pts	24 V DC +10%/15%	10 mA for IN04/05 6 mA for the rest (24 V DC)	2.2 kΩ for IN04/05 3.9 kΩ for the rest	17.4 V DC min.	5.0 V DC max.	8 ms max. (see note)	8 ms max. (see note)	Terminal block	16	---	---

DC Input Units

Model	Number of inputs	Input voltage	Input current	Input impedance	Operating voltage		Response times		External connection	Inputs/ common	Current consumption (5 V DC)	Weight
					ON voltage	OFF voltage	ON delay	OFF delay				
CQM1-ID211	8 pts	12 to 24 V DC +10%/15%	10 mA (24 V DC)	2.4 kΩ	10.2 V DC min.	3.0 V DC max.	8 ms max. (see note)	8 ms max. (see note)	Terminal block	8 independent commons	50 mA max.	180 g max.
CQM1-ID111	16 pts	12 V DC +10%/15%	6 mA (12 V DC)	1.8 kΩ	8.0 V DC min.	3.0 V DC max.	8 ms max. (see note)	8 ms max. (see note)		16	85 mA max.	180 g max.
CQM1-ID212	16 pts	24 V DC +10%/15%	6 mA (24 V DC)	3.9 kΩ	14.4 V DC min.	5.0 V DC max.	8 ms max. (see note)	8 ms max. (see note)		16	85 mA max.	180 g max.
CQM1-ID112	32 pts	12 V DC +10%/15%	4 mA (12 V DC)	2.2 kΩ	8.0 V DC min.	3.0 V DC max.	8 ms max. (see note)	8 ms max. (see note)	Connector	32	170 mA max.	160 g max.
CQM1-ID213	32 pts	24 V DC +10%/15%	4 mA (24 V DC)	5.6 kΩ	14.4 V DC min.	5.0 V DC max.	8 ms max. (see note)	8 ms max. (see note)		32	170 mA max.	160 g max.
CQM1-ID214	32 pts	24 V DC +10%/15%	6 mA (24 V DC)	3.9 kΩ	15.4 V DC min.	5.0 V DC max.	8 ms max. (see note)	8 ms max. (see note)		32	170 mA max.	160 g max.

AC Input Units

Model	Number of inputs	Input voltage	Input current	Input impedance	Operating voltage		Response times		External connection	Inputs/ common	Current consumption (5 V DC)	Weight
					ON voltage	OFF voltage	ON delay	OFF delay				
CQM1-IA121	8 pts	100 to 120 V AC +10%/15%	5 mA (100 V AC)	20 kΩ (50 Hz) 17 kΩ (60 Hz)	60 V AC min.	20 V AC max.	35 ms max.	55 ms max.	Terminal block	8	50 mA max.	210 g max.
CQM1-IA221	8 pts	200 to 240 V AC +10%/15%	6 mA (200 V AC)	38 kΩ (50 Hz) 32 kΩ (60 Hz)	150 V AC min.	40 V AC max.	35 ms max.	55 ms max.		8	50 mA max.	210 g max.

Note: Selectable from 1 to 128 ms in the PLC Setup.

■ Circuit Configuration

CQM1H-CPU11/21/51/61

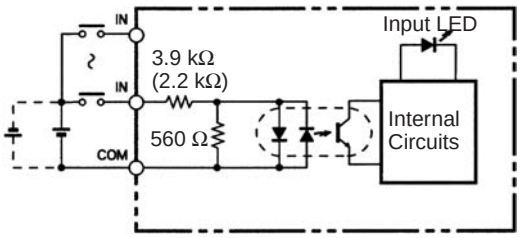

CQM1-ID211

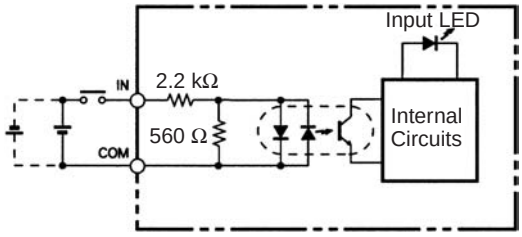

CQM1-ID111/212

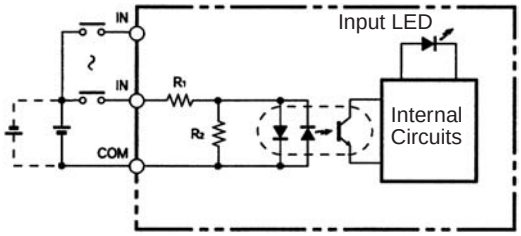

ID111
R_1: 1.8 kΩ
R_2: 620 Ω
ID211
R_1: 3.9 kΩ
R_2: 560 Ω

CQM1-ID112/213/214

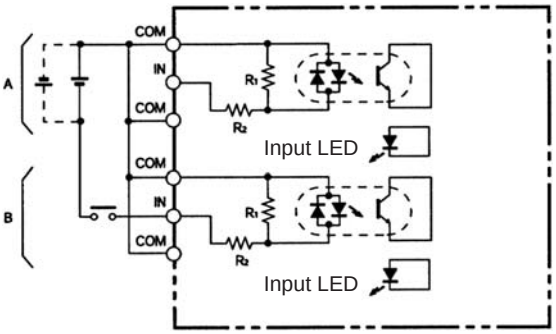

ID112
R_1: 750 Ω
R_2: 2.2 kΩ
ID213
R_1: 620 Ω
R_2: 5.6 kΩ
ID214
R_1: 620 Ω
R_2: 3.9 kΩ

CQM1-IA121

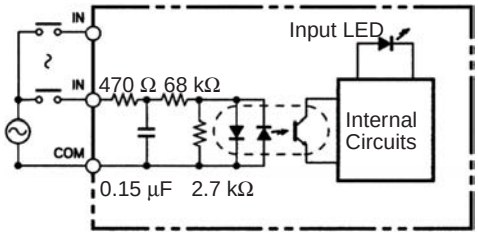

CQM1-IA221

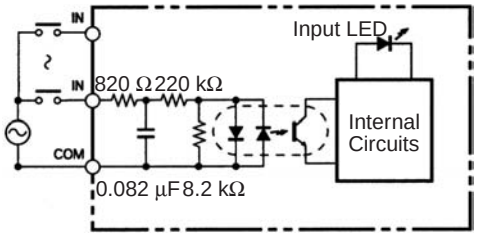

■ Output Unit Specifications

All of the Output Units have LED output indicators.

Contact Output Units

Model	Number of outputs	Max. switching capacity	Min. switching capacity	Response times		External connector	Leakage current	Outputs/ common	Fuses (see note)	External power supply capacity	Internal current consumption (5 V DC)	Weight
				ON delay	OFF delay							
CQM1-OC221	8 pts	2 A, 250 V AC (cosϕ= 1) 2 A, 250 V AC (cosϕ= 0.4) 2 A, 24 V DC (16 A/Unit)	10 mA, 5 V DC	10 ms max.	5 ms max.	Terminal block	---	Independent commons	None	---	430 mA max.	200 g max.
CQM1-OC222	16 pts	2 A, 250 V AC (cosϕ= 1) 2 A, 250 V AC (cosϕ= 0.4) 2 A, 24 V DC (8 A/Unit)	10 mA, 5 V DC	10 ms max.	5 ms max.			16		---	850 mA max.	230 g max.
CQM1-OC224	8 pts	2 A, 250 V AC (cosϕ= 1) 2 A, 250 V AC (cosϕ= 0.4) 2 A, 24 V DC (16 A/Unit)	10 mA, 5 V DC	15 ms max.	5 ms max.			Independent commons		---	440 mA max.	270 g max.

Transistor Output Units

Model	Number of outputs	Max. switching capacity	Min. switching capacity	Response times		External connector	Leakage current	Outputs/ common	Fuses (see note)	External power supply capacity	Internal current consumption (5 V DC)	Weight
				ON delay	OFF delay							
CQM1-OD211	8 pts	2 A at 24 V DC $^{+10\%}/_{-15\%}$ 5 A/Unit	---	0.1 ms max.	0.3 ms max.	Terminal block	0.1 mA max.	8	7A (one fuse/ common)	24 V DC $^{+10\%}/_{-15\%}$ 15 mA min.	90 mA max.	200 g max.
CQM1-OD212	16 pts	50 mA at 4.5 V DC to 300 mA at 26.4 V	---	0.1 ms max.	0.4 ms max.		0.1 mA max.	16	5A (one fuse/ common)	5 to 24 V DC ±10% 40 mA min.	170 mA max.	180 g max.
CQM1-OD213	32 pts	16 mA at 4.5 V DC to 100 mA at 26.4 V	---	0.1 ms max.	0.4 ms max.	Connector	0.1 mA max.	32	3.5A (one fuse/ common)	5 to 24 V DC ±10% 110 mA min.	240 mA max.	180 g max.
CQM1-OD214 (PNP, sourcing)	16 pts	50 mA at 4.5 V DC to 300 mA at 26.4 V	---	0.1 ms max.	0.4 ms max.	Terminal block	0.1 mA max.	16	3.5A (two fuses/ common)	5 to 24 V DC ±10% 60 mA min.	170 mA max.	210 g max.
CQM1-OD215 (PNP, sourcing)	8 pts	1.0 A at 24 V DC $^{+10\%}/_{-15\%}$ 4 A/ Unit	---	0.2 ms max.	0.8 ms max.		0.1 mA max.	8	Short-circuit protection function	24 V DC $^{+10\%}/_{-15\%}$ 24 mA min.	110 mA max.	240 g max.
CQM1-OD216 (PNP, sourcing)	32 pts	0.5 A at 24 V DC $^{+10\%}/_{-15\%}$ 5 A/ Unit	---	0.1 ms max.	0.3 ms max.	Connector	0.1 mA max.	32	7A (one fuse/ common)	24 V DC $^{+10\%}/_{-15\%}$ 160 mA min.	240 mA max.	210 g max.

AC Output Units

Model	Number of outputs	Max. switching capacity	Min. switching capacity	Response times		External connector	Leakage current	Outputs/ common	Fuses (see note)	External power supply capacity	Internal current consumption (5 V DC)	Weight
				ON delay	OFF delay							
CQM1-OA221	8 pts	0.4 A at 100 to 240 V AC	---	6 ms max.	1/2 cycle + 5 ms max.	Terminal block	1 mA max. at 100 V AC, 2 mA max. at 200 V AC	4 each (2 circuits)	2A (one fuse/ common)	---	110 mA max.	240 g max.
CQM1-OA222	6 pts	0.4 A at 100 to 240 V AC	100 mA at 10 V AC 50 mA at 24 V AC 10 mA at 100 V AC 10 mA at 240 V AC	1 ms max.	Load frequency of 1/2 cycle + 1 ms max.			4 and 2 (2 circuits)	5A (one fuse/ common)	---	250 mA max.	240 g max.

Note: Fuses are not user-serviceable.

■ Circuit Configuration

CQM1-OC221

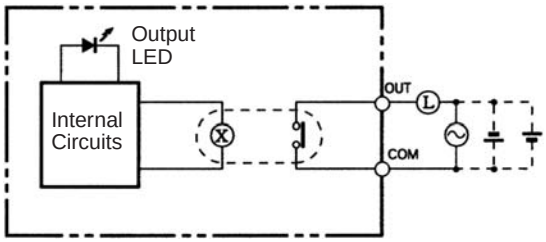

CQM1-OC222

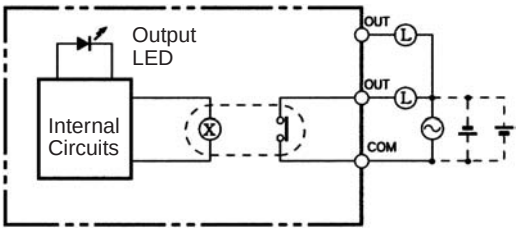

CQM1-OD211

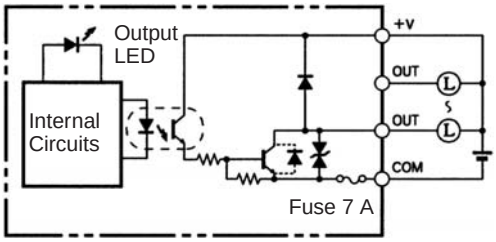

CQM1-OC224

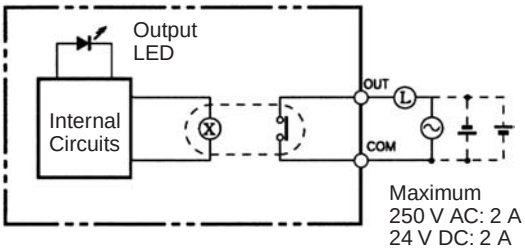

CQM1-OD212

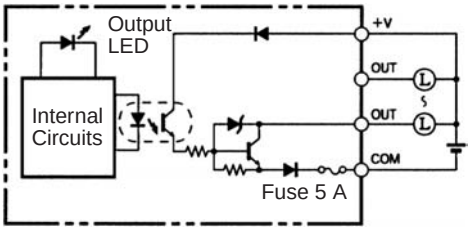

CQM1-OD214

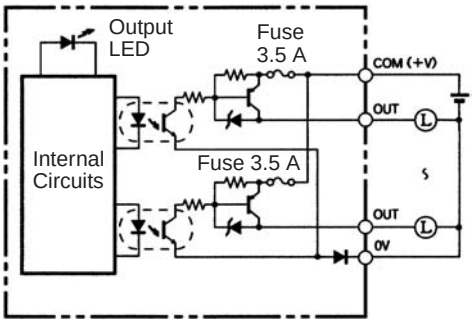

CQM1-OD213

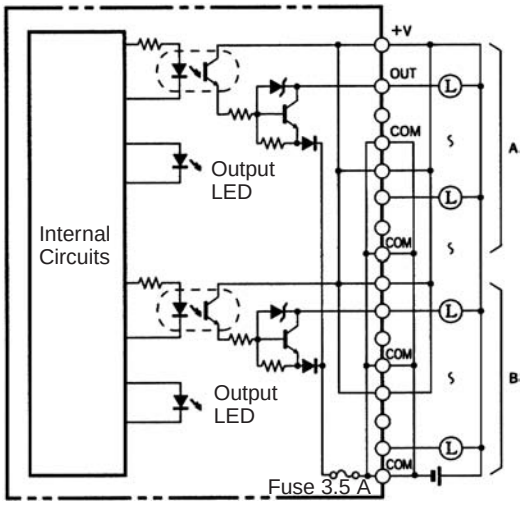

CQM1-OA221

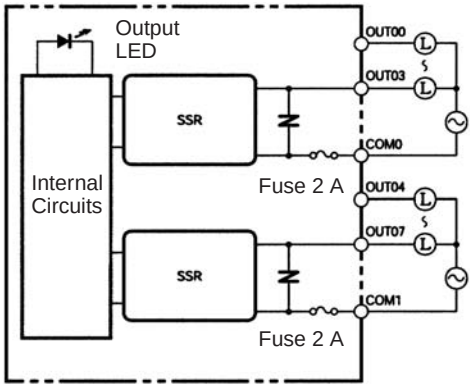

CQM1-OD215

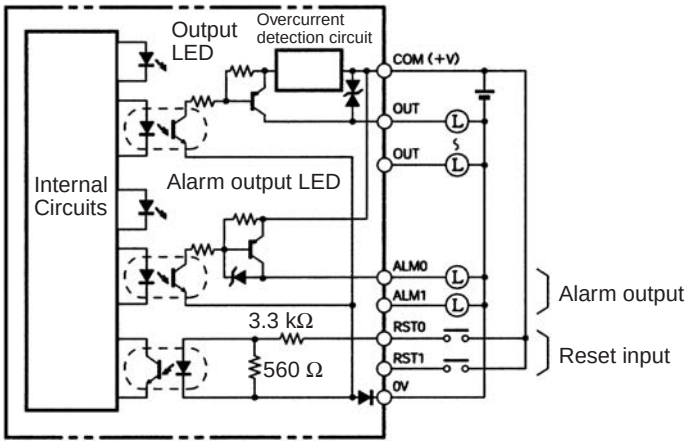

CQM1-OA222

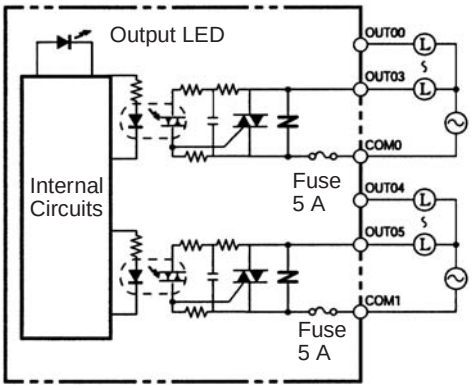

CQM1-OD216

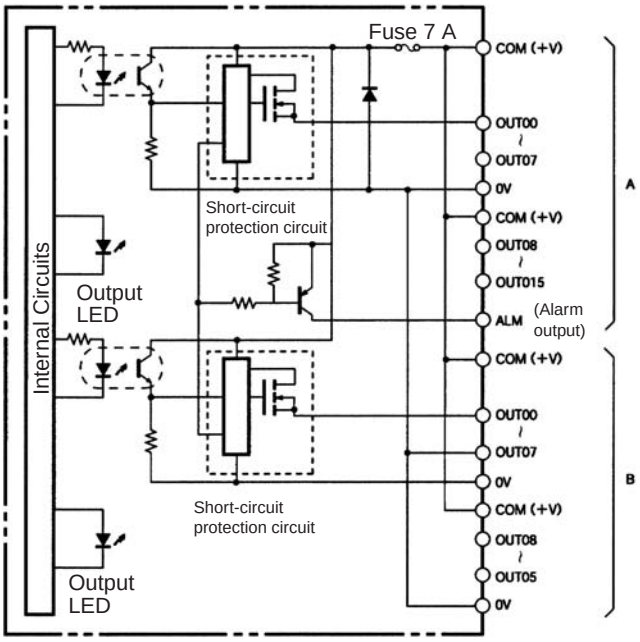

Programming Devices

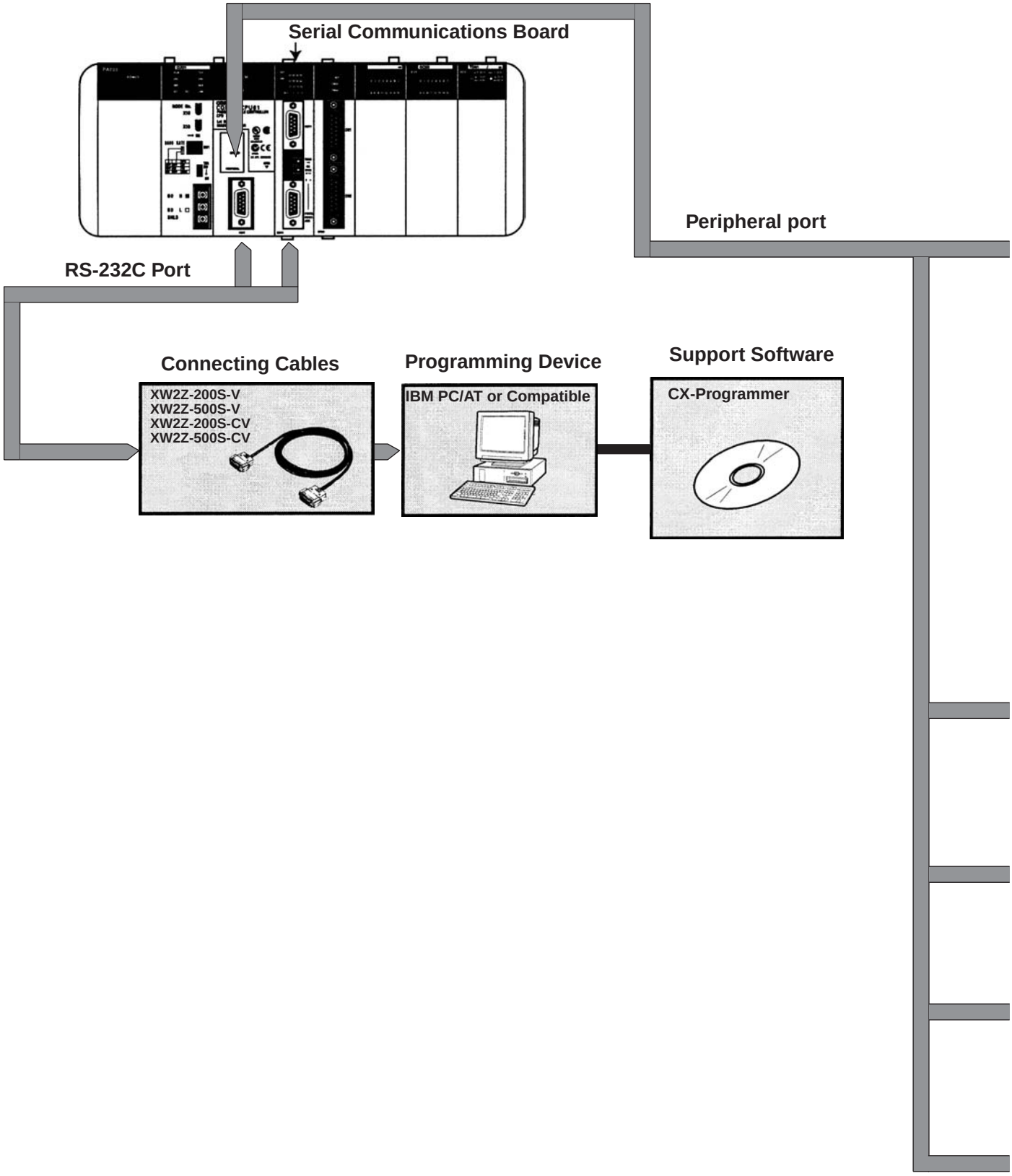

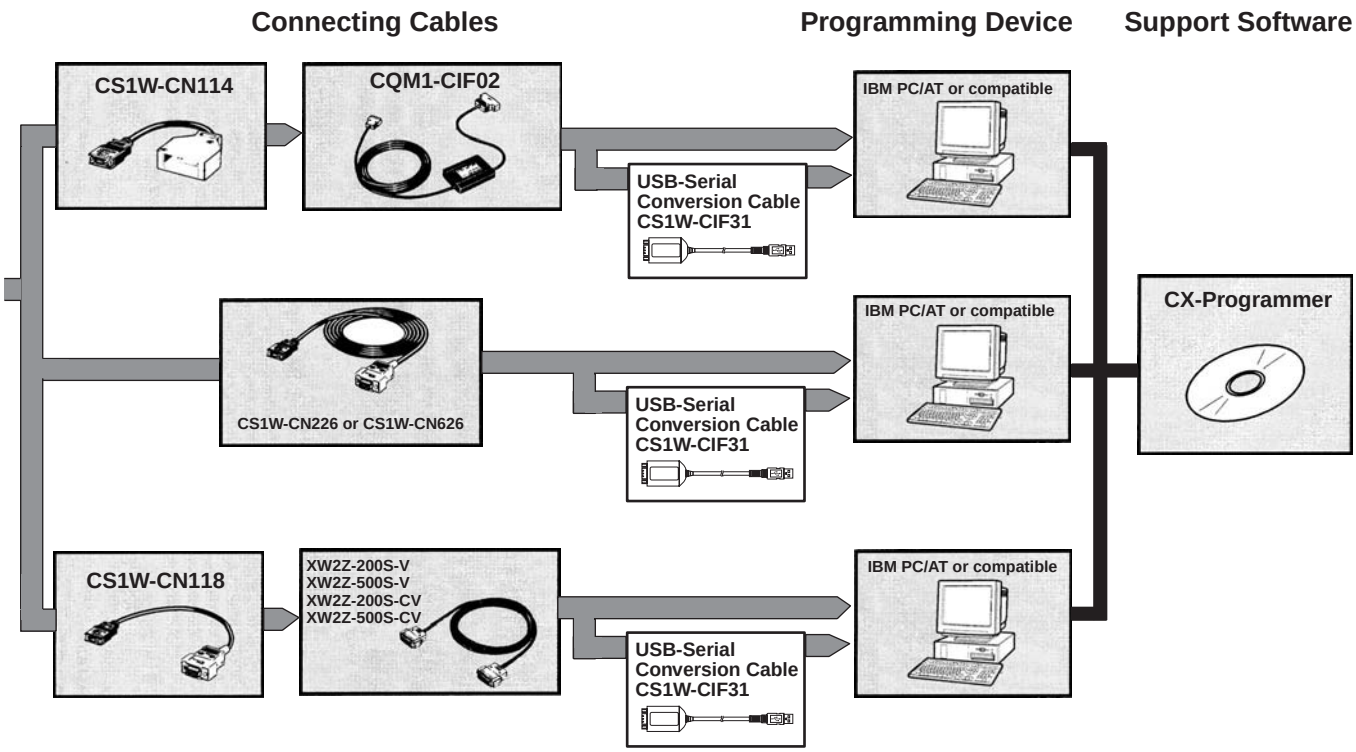
Connecting Cables
Programming Device
Support Software
CS1W-CN114
CQM1-CIF02
IBM PC/AT or compatible
USB-Serial Conversion Cable CS1W-CIF31
CS1W-CN226 or CS1W-CN626
IBM PC/AT or compatible
USB-Serial Conversion Cable CS1W-CIF31
CX-Programmer
CS1W-CN118
XW2Z-200S-V
XW2Z-500S-V
XW2Z-200S-CV
XW2Z-500S-CV
IBM PC/AT or compatible
USB-Serial Conversion Cable CS1W-CIF31

Programming Console
CQM1H-PRO01-E

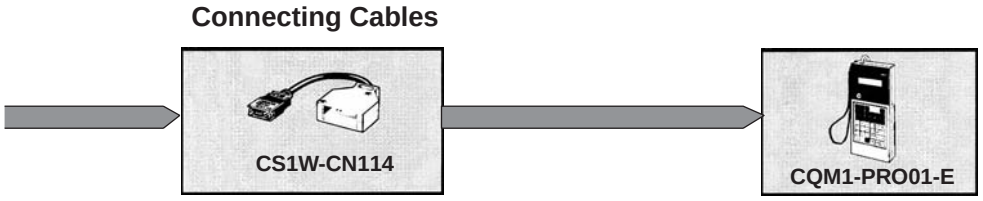
Connecting Cables
CS1W-CN114
CQM1-PRO01-E

CS1W-CN114
C200H-CN□22
C200H-PRO27-E

CS1W-CN224 or CS1W-CN624
C200H-PRO27-E

Dimensions

Note: All dimensions are in millimeters.

■ Overall CQM1H Dimensions

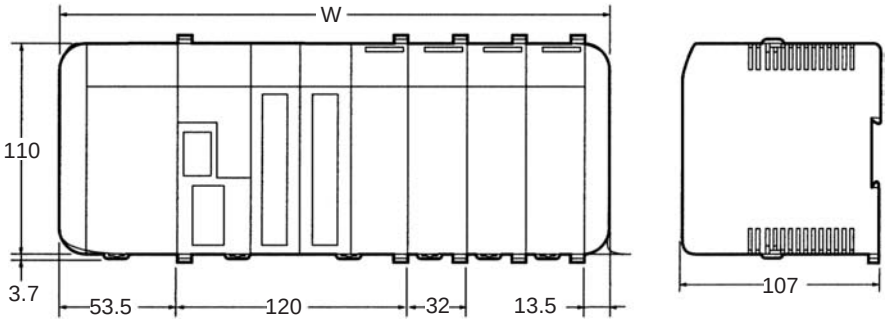

Overall PLC Widths for Example Configurations

Number of I/O Units	PA203 Power Supply Unit	PA206, PA216, or PD026 Power Supply Unit
	W (mm)	W (mm)
3	283	315
4	315	347
5	347	379

Calculating Overall PLC Width with "n" I/O Units

Power Supply Unit	W (mm)
CQM1-PA203	32 × n + 187
CQM1-PA206	32 × n + 219
CQM1-PA216	
CQM1-PD026	

Note: The total number of I/O Units and Dedicated I/O Units (n) is limited to 12 Units (11 without a Communications Unit) for the CQM1H-CPU51/61 and 11 Units for the CQM1H-CPU11/21.

■ Power Supply, CPU, Communications, Dedicated I/O, and I/O Units

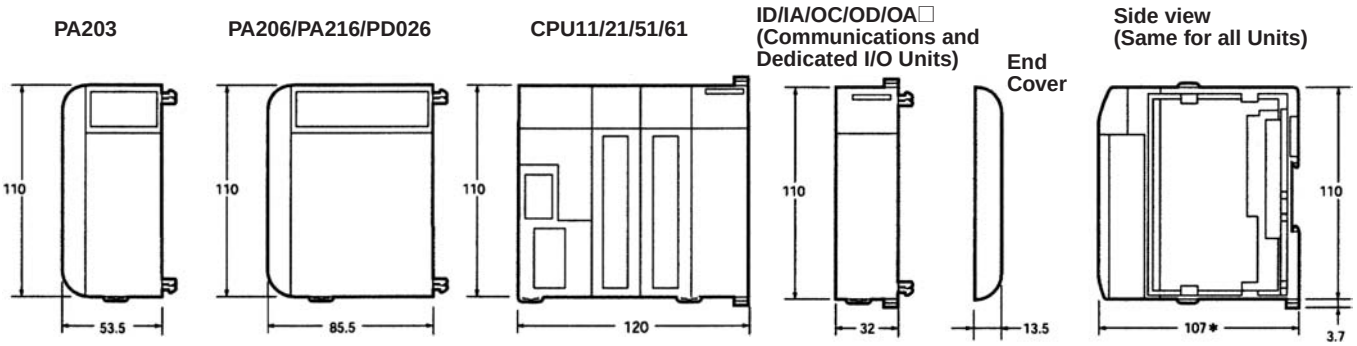

*The CQM1-OC224 is 131.7 mm wide.

Name	Model	Weight
Power Supply Units	CQM1-PA203	460 g max
	CQM1-PA206	560 g max
	CQM1-PD026	
	CQM1-PA216	
CPU Units	CQM1H-CPU11	500 g max.
	CQM1H-CPU21	510 g max.
	CQM1H-CPU51	
	CQM1H-CPU61	
Input Units	CQM1-ID211	180 g max.
	CQM1-ID111	
	CQM1-ID212	
	CQM1-ID112	160 g max.
	CQM1-ID213	
	CQM1-ID214	
	CQM1-IA121	210 g max.
	CQM1-IA221	

Name	Model	Weight
Output Units	CQM1-OC221	200 g max.
	CQM1-OC222	230 g max.
	CQM1-OC224	270 g max.
	CQM1-OD211	200 g max.
	CQM1-OD212	180 g max.
	CQM1-OD213	160 g max.
Output Units	CQM1-OD214	210 g max.
	CQM1-OD215	240 g max.
	CQM1-OD216	210 g max.
	CQM1-OA221	240 g max.
	CQM1-OA222	

CQM1H-IC101

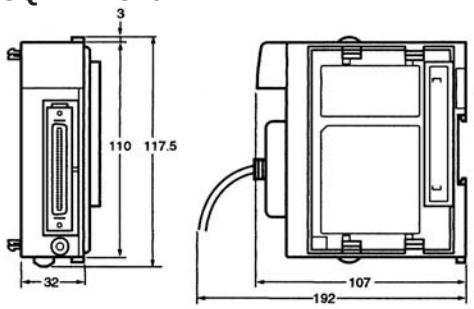

Weight: 131 g max.

CQM1H-II101

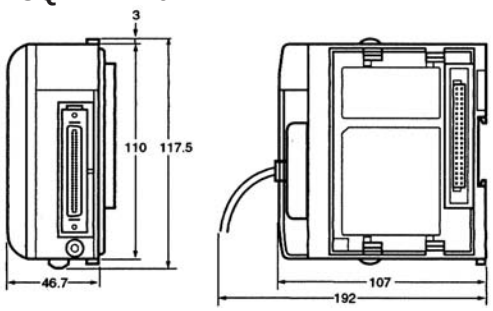

Weight: 211 g max.

Programming Console CQM1H-PRO01-E

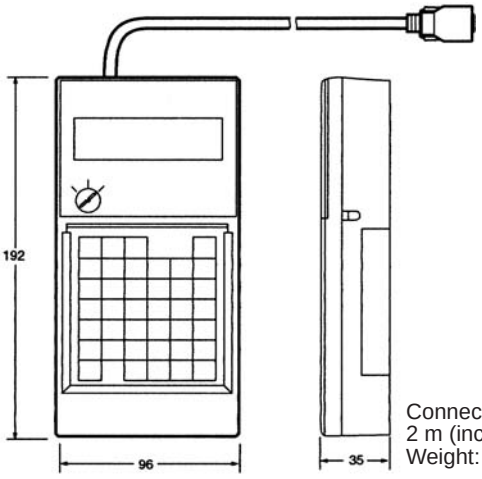

Connecting cable length: 2 m (included)
Weight: 515 g max.

Programming Console CQM1-PRO01-E

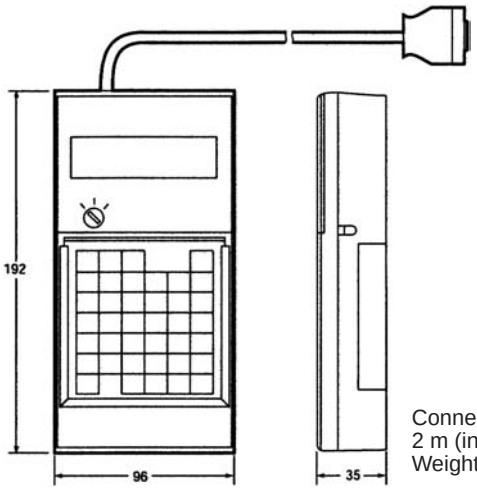

Connecting cable length: 2 m (included)
Weight: 515 g max.

DIN Track PFP-100N2

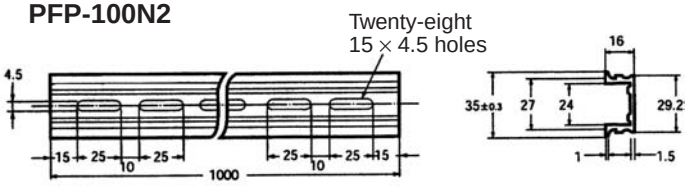

PFP-100N/50N

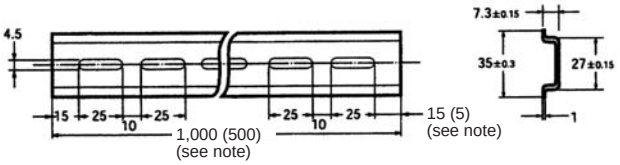

Note: The figures in parentheses are for the PFP-50N.

Inner Boards

The six available Inner Boards are shown below. Inner Boards can be mounted in slot 1 or slot 2 of a CQM1H-CPU51 or CQM1H-CPU61 CPU Unit. (Some Inner Boards must be mounted in either slot 1 or slot 2.)

CQM1H-PLB21
Pulse I/O Board

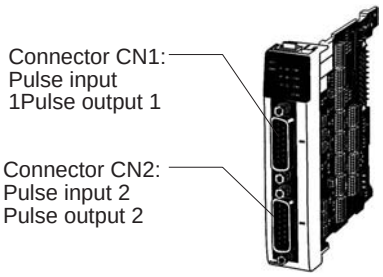

CQM1H-ABB21
Absolute Encoder Interface Board

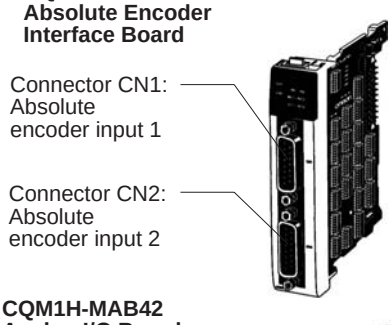

CQM1H-CTB41
High-speed Counter Board

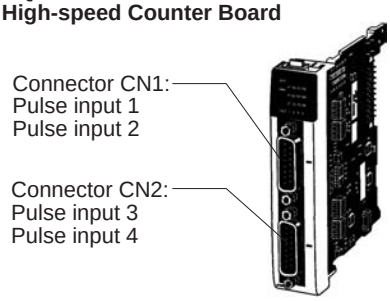

CQM1H-AVB41
Analog Setting Board

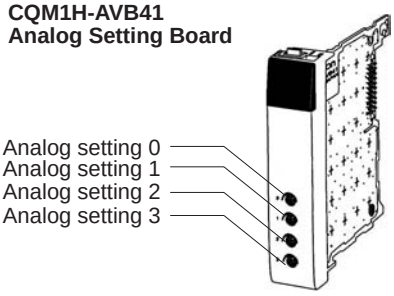

CQM1H-MAB42
Analog I/O Board

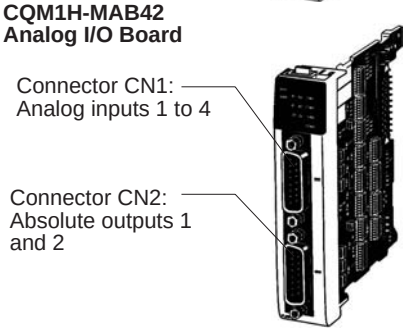

CQM1H-SCB41
Serial Communications Board

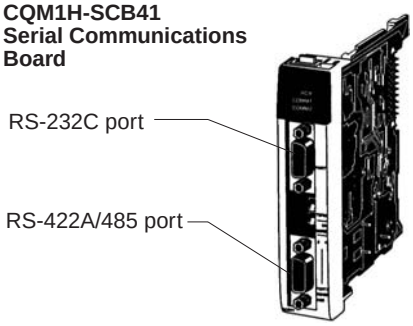

Inner Board Specifications

Name	Specifications	Model number	Slot 1 (left slot)	Slot 2 (right slot)
High-speed Counter Board	Pulse inputs (high-speed counter): 4 points (50 kHz/500 kHz switchable) External outputs: 4 points	CQM1H-CTB41	Yes	Yes
Pulse I/O Board	Pulse inputs (high-speed counter): 2 points (single-phase: 50 kHz, phase difference: 25 kHz) Pulse outputs: 2 points (50 kHz) (fixed duty factor and variable duty factor supported)	CQM1H-PLB21	No	Yes
Absolute Encoder Interface Board	Encoder (binary gray code) inputs: 2 points (4 kHz)	CQM1H-ABB21		
Analog Setting Board	Analog settings: 4 points	CQM1H-AVB41	Yes (Install in either but not in both slots.)	
Analog I/O Board	Four inputs: 0 to 5 V, 0 to 10 V, –10 to +10 V, 0 to 20 mA Two outputs: 0 to 20 mA, –10 to +10 V	CQM1H-MAB42	No	Yes
Serial Communications Board	One RS-232C port and one RS-422A/485 port	CQM1H-SCB41	Yes	No

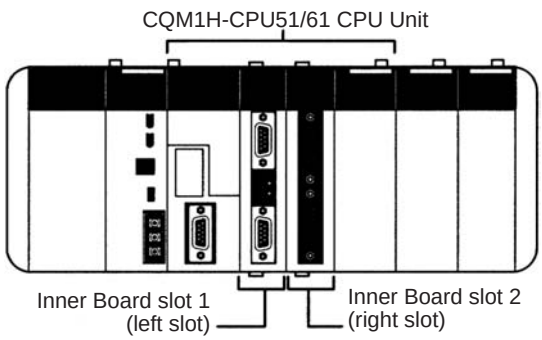

High-speed Counter Board
CQM1H-CTB41

The High-speed Counter Board is an Inner Board that counts up to 4 high-speed pulse inputs at up to 500 kHz, and can perform tasks according to the number of pulses counted.

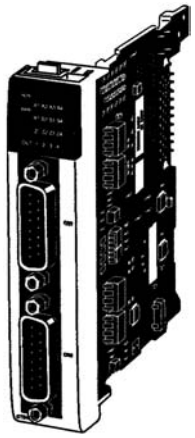

- Can count 4-axis high-speed pulses at up to 500 kHz.
- Provides 4 external outputs on the Board.
- Both linear and ring counting modes are supported.
- The input can be a voltage input or an RS-422A line driver input.
- Three input modes are available: differential phase mode, up/down mode, and pulse + direction mode
- The counters can be set to record the present values in decimal or hexadecimal.

Example System Configuration

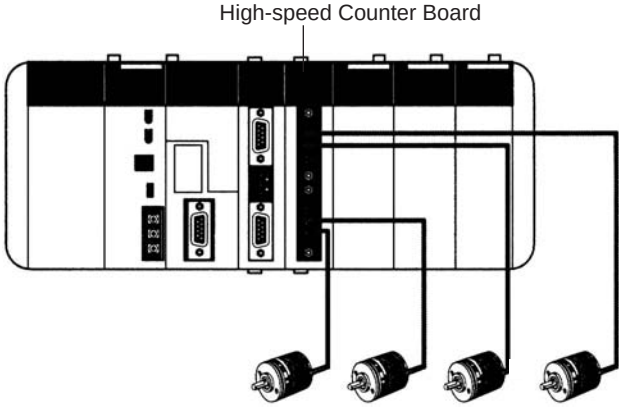

Specifications

Item	Specifications
Name	High-speed Counter Board
Model number	CQM1H-CTB41
Applicable CPU Units	CQM1H-CPU51/61
Unit classification	CQM1H-series Inner Board
Mounting location/No. of Boards	Maximum of two Boards can be mounted simultaneously in slots 1 and 2.
Pulse inputs	4 inputs
External outputs	4 outputs
Current consumption (Supplied from Power Supply Unit)	5 V DC, 400 mA max.
Dimensions	25 × 110 × 107 mm (W × H × D)
Weight	90 g max.
Standard accessories	Plugs: XM2D-1501 (OMRON) x 2 Hoods: XM2S-1511 (OMRON) x 2

Pulse Inputs (High-speed Counters)

Pulse Input Function

Item		Specifications		
Number of counters		4 counters (4 ports)		
Input modes (Set in the PLC Setup.)		Differential Phase Inputs	Up/Down Pulse Inputs	Pulse/Direction Inputs
Input method		Switching between inputs using phase difference multiples of 1x, 2x, or 4x. (Set in the PLC Setup.)	Two single-phase inputs	Single-phase pulse and direction inputs
Count frequency (Set for each port in the PLC Setup.)		25 kHz (default) or 250 kHz	50 kHz (default) or 500 kHz	50 kHz (default) or 500 kHz
Count values		Linear counting:–8388608 to 8388607 BCD, F8000000 to 07FFFFFF Hex Ring counting:00000000 to 08388607 BCD, 00000000 to 07FFFFFF Hex		
Control method	Target value comparison	Up to 48 target values and external/internal output bit patterns registered.		
	Range comparison	Up to 16 upper limits, lower limits, and external/internal output bit patterns registered.		

Pulse Input Specifications

Item	Specifications			
Number of pulse inputs	4 inputs (Ports 1 to 4 = High-speed counters 1 to 4)			
Signals	Encoder inputs A and B; pulse input Z			
Input voltage	Switched by means of input voltage switch on the Board (Specified separately for phases A, B, and Z.)			
	24 V DC±10%		RS-422A line driver (AM26LS31 or equivalent)	
	Phase A and B	Phase Z	Phase A and B	Phase Z
Input current	5 mA typical	8 mA typical	10 mA typical	13 mA typical
ON voltage	19.6 V DC min.	18.6 V DC min.	---	---
OFF voltage	4.0 V DC min.	4.0 V DC min.	---	---

External Output Specifications

Item	Specifications
Number of external outputs	4 transistor outputs (The four outputs are set together as sinking or sourcing outputs in the PLC Setup.)
Function	The target comparison or range comparison results of high-speed counters 1 to 4 output four user-defined 4-bit external bit patterns (bits 08 to 11 of either IR 208 to IR 211 or IR 240 to IR 243). An OR is taken of corresponding bits in these four bit patterns, and the result is output on external outputs 1 to 4.
External power supply	5 to 24 V DC±10%
Switching capacity	16 mA/4.5 V DC to 80 mA/26.4 V
Leakage current	0.1 mA max.
Residual voltage	0.8 V max.
Response time	ON response: 0.1 ms max.; OFF response: 0.4 ms max.

Pulse I/O Board
CQM1H-PLB21

The Pulse I/O Board is an Inner Board that supports two pulse inputs and two pulse outputs.

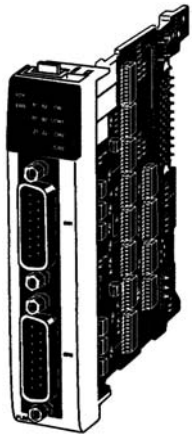

Pulse Inputs

- The two pulse inputs to high-speed counters count pulses at up to 50 kHz (signal phase) or 25 kHz (differential phase). Interrupt can be created based on the counter present values (PV).

Interrupts

The Board can execute an interrupt subroutine when the counter PV matches a specified target value (target value comparison) or falls within a specified comparison range (range comparison.)

Pulse Outputs 1 and 2

Two 10 Hz to 50 kHz pulses can be output. Both fixed and variable duty factors can be used.

- The fixed duty factor can be used to change the output frequency (accelerate or decelerate) from 10 Hz to 50 kHz smoothly.
- The variable duty factor performs using a duty factor ranging from 1% to 99%. Variable duty factor pulses can be used for applications such as time-proportional control.

Example System Configuration

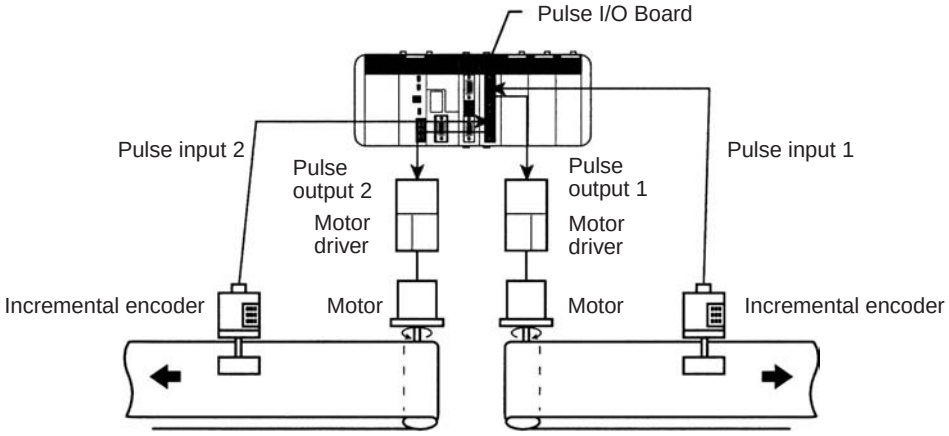

Specifications

Item	Specifications
Name	Pulse I/O Board
Model number	CQM1H-PLB21
Applicable CPU Units	CQM1H-CPU51/61
Unit classification	CQM1H-series Inner Board
Mounting locations/No. of Boards	One in Inner Board slot 2 (right slot)
Pulse inputs	2 inputs
Pulse outputs	2 outputs
Current consumption (Supplied from Power Supply Unit)	5 V DC, 160 mA max.
Dimensions	25 × 110 × 107 mm (W × H × D)
Weight	90 g max.
Standard accessories	Two XM2D-1501 Plugs and two XM2S-1511 Hoods (OMRON)

■ Pulse Input (High-speed Counter) Specifications

Pulse Input Function

Item		Specifications		
Number of counters		2 counters (ports)		
Input Modes (Set for each port in the PLC Setup.)		Differential phase input	Pulse/Direction input	Up/Down pulse input
Input method		Phase difference multiple of 4 (Fixed)	Single-phase pulse + direction	Single-phase input x 2
Count frequency		25 kHz	50 kHz	50 kHz
Count values		Linear counting: –8388608 to 8388607 BCD Ring counting: 00000000 to 00064999 BCD		
Control method	Target value comparison	Register up to 48 target values and interrupt subroutine numbers.		
	Range comparison	Register up to 8 upper limits, lower limits, and interrupt subroutine numbers.		

Pulse Input Specifications

Item	Specifications			
Number of pulse inputs	2 inputs (Ports 1 and 2 = Pulses 1 and 2)			
Signal names	Encoder input A, encoder input B, pulse input Z			
Input voltage	Switched by means of connector pins (Can be specified separately for phases A, B, and Z.)			
	12 V DC±10%		24 V DC±10%	
Input current	Phases A and B	Phase Z	Phases A and B	Phase Z
	5 mA typical	12 mA typical	5 mA typical	12 mA typical
ON voltage	10.2 V DC min.		20.4 V DC min.	
OFF voltage	3.0 V DC min.		4.0 V DC min.	

■ Pulse Output Specifications

Pulse Output Function

Pulse output function is determined by the output method, as indicated below.

Item	Fixed duty factor			Variable duty factor
	Without trapezoidal acceleration/ deceleration	With trapezoidal acceleration/deceleration		
		Same acceleration/ deceleration rates	Separate acceleration/ deceleration rates	
Instruction	PULS(65)/SPED(64)	PLS2(—)	PULS(65)/ ACC(—)	PWM(—)
Output frequency	10 Hz to 50 kHz (10 Hz to 20 kHz for stepping motor)	0 Hz to 50 kHz	100 Hz to 50 kHz	91.6 Hz, 1.5 kHz, 5.9 kHz
Output frequency pitch	1 or 10 Hz	10 Hz		---
Duty factor	50% fixed			1 to 99%
Number of output pulses	1 to 16,777,215			---
Acceleration/ deceleration rate	---	10 Hz to 2 kHz (every 4.08 ms)		---

Output Specifications

Item	Specifications
Number of pulse outputs	2 outputs (Ports 1 and 2 = Pulse outputs 1 and 2)
Signal names	CW and CCW pulse output
Max. output frequency	50 kHz (20 kHz with stepping motor connected.)
External power supply	5 V DC±5% 30 mA min.; 24 V DC $^{+10\%}/_{-15\%}$ 30 mA min.
Max. switching capacity	NPN open collector, 30 mA/5 to 24 V DC±10%
Min. switching capacity	NPN open collector, 7 mA/5 to 24 V DC±10%
Leakage current	0.1 mA max.
Residual voltage	0.4 V max.

Absolute Encoder Interface Board
CQM1H-ABB21

The Absolute Encoder Interface Board is an Inner Board that allows position data to be directly input from absolute rotary encoders.

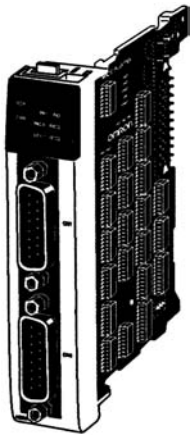

Absolute High-speed Counter

The Absolute Encoder Interface Board reads binary gray codes (inverted binary codes) input from an absolute encoder at a maximum counting rate of 4 kHz, and can perform interrupt processing according to the input values.

Interrupts

An interrupt subroutine can be executed when the PV (present value) of the absolute high-speed counter matches a specified target value (target value comparison) or falls within a specified comparison range (range comparison.)

Note: When an absolute encoder is used the position data can be retained even during power interrupts, so it isn't necessary to perform an origin return when power is returned. In addition, the origin compensation function allows the user to specify any position as the origin.

Example System Configuration

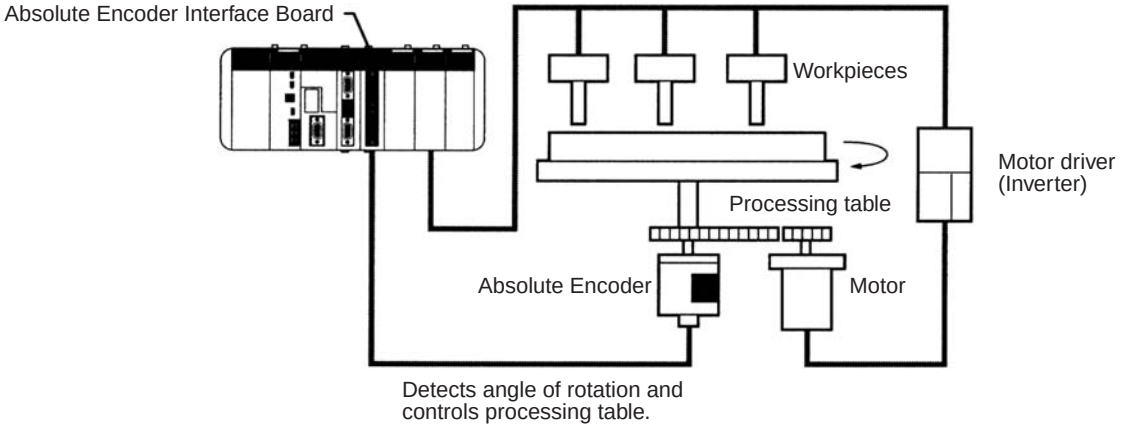

Specifications

Item	Specifications
Name	Absolute Encoder Interface Board
Model number	CQM1H-ABB21
Applicable CPU Units	CQM1H-CPU51/61
Unit classification	CQM1H-series Inner Board
Mounting locations and number of Boards	1 Board can be mounted in slot 2.
Absolute Encoder inputs	2 inputs
Current consumption (Supplied from Power Supply Unit)	5 V DC, 150 mA max.
Dimensions	25 × 110 × 107 mm (W × H × D)
Weight	90 g max.
Standard accessories	Plugs:XM2D-1501 (OMRON) x 2 Hoods:XM2S-1511 (OMRON) x 2

■ Absolute Encoder Input Specifications

Item		Specifications
Number of inputs		Two inputs
Input code		Binary gray code
Operating modes		BCD Mode or 360° Mode (Set in PLC Setup.)
Resolutions		8-bit, 10-bit, or 12-bit (Set in PLC Setup.)
Origin compensation		Supported. (Current position can be designated as origin). Compensation is set in PLC Setup.
Counting rate		4 kHz max.
Control methods	Target value comparison	Register up to 48 target values and interrupt subroutine numbers.
	Range comparison	Register up to 8 upper limits, lower limits, and interrupt subroutine numbers.

■ Pulse Inputs

Item	Specifications
Input voltage	24 V DC +10%, –15%
Input impedance	5.4 kΩ
Input current	4 mA typical
ON voltage	16.8 V DC min.
OFF voltage	3.0 V DC max.

Serial Communications Board
CQM1H-SCB41

The Serial Communications Board is an Inner Board equipped with 2 ports that can be used to connect host computers, Programmable Terminals, external serial devices, or Programming Devices other than a Programming Console.

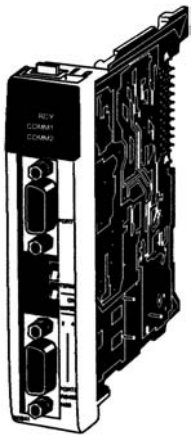

- Unlike the CPU Unit's built-in ports, the Serial Communications Board supports the protocol macro function which can improve communications between the CQM1H and external serial devices.
- The Serial Communications Board has 2 ports: an RS-232C port and an RS-422A/485 port. The RS-422A/485 port supports 1:N connections (protocol macro or NT Link in 1:N mode) without an adapter.

System Configuration

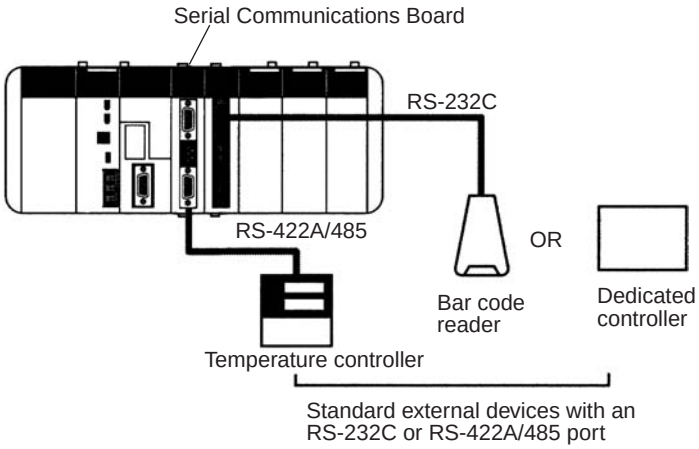

Communications Modes

The following 6 communications modes can be set independently for the two Serial Communications Board ports.

- Host Link: Communications with a host computer, Programming Device, or Programmable Terminal
- No-protocol: No-protocol communications (TXD and RXD) with standard external devices
- Protocol macro: Communications according to the external device's communications specifications
- 1:1 Data Link: Data link with a CQM1H, CQM1, or other C-series PLC
- NT Link in 1:N mode: One-to-one or one-to-N communications with Programmable Terminals
- NT Link in 1:1 mod: One-to-one communications with Programmable Terminal

■ Communications Ports and Serial Communications Modes

Serial communications protocol	CQM1H-SCB41 Serial Communications Board	
	RS-232C port (port 1)	RS-422A/485 port (port 2)
Peripheral bus or Programming Console bus	No	No
Host Link (SYSMAC WAY)	YES	YES[1]
Protocol macro	YES	YES
No-protocol	YES	YES[1]
1:1 Data Link	YES	YES[1]
NT Link in 1:1 mode	YES[2]	YES[2]
NT Link in 1:N mode	YES[2]	YES[2]

Note: 1. The 4-wire method must be used if the RS-422A/485 port is used in Host Link, No-protocol, or 1:1 Data Link mode.
2. A Programmable Terminal's Programming Console function cannot be used.

Serial Communications Board Specifications

Item		Specification
Model		CQM1H-SCB41
Unit classification		CQM1H-series Inner Board
Applicable CPU Units		CQM1H-CPU61/51
Mounting locations and number of Boards		1 Board can be mounted in slot 1.
Serial Communications ports	Port 1	RS-232C: 19.2 kbps max., 15 m max.
	Port 2	RS-422A/485: 19.2 kbps max., 500 m max.
Protocols	Port 1	Each port can be set independently to Host Link, No-protocol, Protocol macro, 1:1 Data Link, NT Link in 1:N mode, or NT Link in 1:1 mode.
	Port 2	
Current consumption		5 VDC, 200 mA max.
Dimensions		25 × 110 × 107 mm (W × H × D)
Weight		90 g max.
Standard accessories		Plugs: XM2SA-0901 (OMRON) x 2 Hoods: XM2SA-0911 (OMRON) x 2 (ESD)

Protocol Macros

Protocol macros provide a way to create data communications protocols for the communications specifications of external devices with serial communications ports (half-duplex, start-stop sync only). The protocol macros are made on the CX-Protocol Support Software and then recorded in the Serial Communications Board, where they can be executed at any time using the PMCR instruction in the CPU Unit's ladder program.

Standard system protocols are also provided with the CX-Protocol and Serial Communications Board for easy communications with OMRON components, such as Temperature Controllers, Intelligent Signal Processors, Bar Code Readers, and Modems. The standard system protocols can also be modified for specific applications using the CX-Protocol.

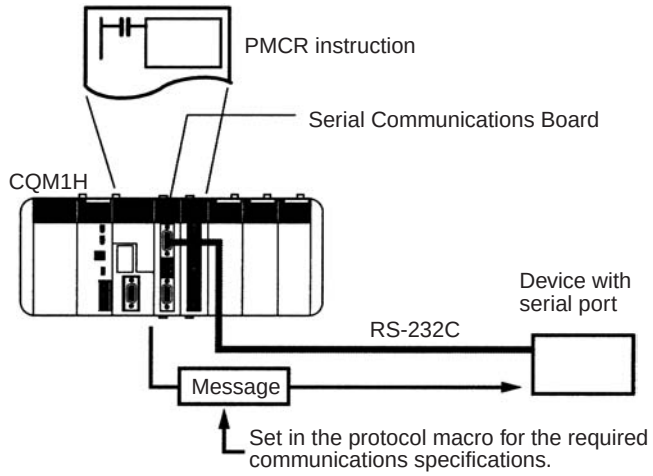

Analog I/O Board
CQM1H-MAB42

- The Analog I/O Board is an Inner Board with four analog inputs and two analog outputs.
- The signal ranges that can be used for each of the four analog inputs are –10 to +10 V, 0 to 10 V, 0 to 5 V, and 0 to 20 mA. Each input's signal range can be set independently.
- The signal ranges that can be used for each of the two analog output points are –10 to +10 V and 0 to 20 mA. Each output's signal range can be set independently.

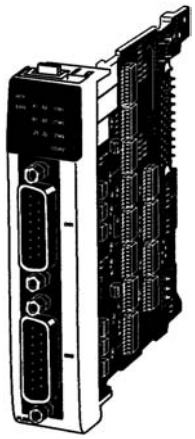

System Configuration

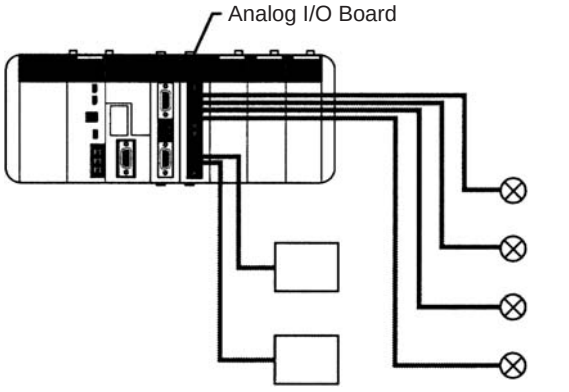

Specifications

Item	Specifications
Name	Analog I/O Board
Model number	CQM1H-MAB42
Applicable CPU Units	CQM1H-CPU51/61
Unit classification	CQM1H-series Inner Board
Mounting locations and number of Boards	1 Board in Inner Board slot 2 (right slot)
Analog inputs	4 inputs
Analog outputs	2 outputs
Current consumption (Supplied from Power Supply Unit)	5 V DC, 400 mA max.
Dimensions	25 × 110 × 107 mm (W × H × D)
Weight	100 g max.
Standard accessories	Plugs: XM2D-1501 (OMRON) x 2 Hoods: XM2S-1511 (OMRON) x 2

Analog Inputs

Item		Specifications	
Input signals		Voltage inputs	Current inputs
Number of analog inputs		4 inputs	
Input signal ranges[1]		–10 to 10 V 0 to 10 V 0 to 5 V	0 to 20 mA
A/D conversion time[2]		1.7 ms max./point	
Resolution		1/4,096	
A/D conversion output data		12-bit binary data –10 to +10 V: F800 to 07FF Hex 0 to 10 V, 0 to 5 V:0000 to 0FFF Hex	12-bit binary data 0 to 20 mA: 0000 to 0FFF Hex
External input impedance		1 MΩ typical	250 Ω typical
Absolute maximum rated input		±15 V	±30 mA
Overall precision[3]	23±2°C	±0.5% of FS	
	0 to 55°C	±1.0% of FS	

Note: 1. Separate input signal ranges can be set for each input.

2. The A/D conversion time is the time taken for an analog signal to be stored in memory as digital data. At least one cycle is required to transfer the data to the CPU Unit.

3. The overall precision is the precision with respect to full scale.

4. The CQM1H-MAB42 Analog I/O Board, unlike the CQM1-AD041, does not have a hardware average processing function. If averaging of data is required, use the CPU Unit's data averaging instruction (AVG).

Analog Outputs

Item		Specifications	
Output signals		Voltage outputs	Current outputs
Number of analog outputs		2 outputs	
Output signal ranges[1]		–10 to 10 V	0 to 20 mA
D/A conversion time[2]		1.7 ms max./2 points	
Resolution		1/4,096	1/2,048
Set output data		12-bit binary data –10 to +10 V: F800 to 07FF Hex	11-bit binary data 0 to 20 mA: 0000 to 07FF Hex
Allowable external output load resistance		2 KΩ min.	350 Ω max.
Overall precision[3]	23±2°C	±0.5% of FS	
	0 to 55°C	±1.0% of FS	

Note: 1. Separate output signal ranges can be set for each output.

2. The D/A conversion time is the time taken for the output data set in memory to be converted to analog signals and output. At least one cycle is required to transfer the data in the CPU Unit to the Analog I/O Board.

3. The overall precision is the precision with respect to full scale.

Analog Setting Board
CQM1H-AVB41

- The Analog Setting Board is an Inner Board that provides four variable resistor adjustments. The settings on the four adjustments are stored in the analog setting words.
- By using the Analog Setting Board, an operator can, for example, set the value of a timer instruction using an analog adjustment, and thereby slightly speed up or slow down the speed or timing of a conveyor belt simply by turning an adjustment screw with a screwdriver, removing the need for a Programming Device.

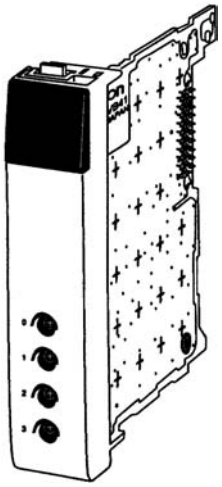

Using the Analog Timer

The following example shows the 4-digit BCD setting (0000 to 0200) stored in IR 220 to IR 223 being used as a timer setting.

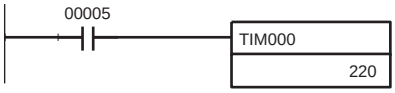

The setting of TIM 000 is set externally in IR 220. (TIM 000 is executed using the SV set with analog adjustment 0.)

Specifications

Item	Specifications
Name	Analog Setting Board
Model number	CQM1H-AVB41
Applicable CPU Units	CQM1H-CPU51/61
Unit classification	CQM1H-series Inner Board
Mounting locations and number of Boards	1 Board can be mounted in either slot 1 or slot 2. **Note:** Two Analog Setting Boards cannot be used at the same time.
Settings	4 analog (variable resistor) adjustment screws on front panel (Adjustable using Phillips screwdriver.) The settings of adjustments 0 to 3 are stored as 4-digit BCD values between 0000 and 0200 in IR 220 to IR 223 respectively.
Current consumption (Supplied from Power Supply Unit)	5 V DC, 10 mA max.
Dimensions	25 × 110 × 107 mm (W × H × D)
Weight	60 g max.

Communications Units

Controller Link Unit
CQM1H-CLK21

The Controller Link is an FA network that can send and receive large data packets flexibly and easily among the OMRON CQM1H-series, C200HX/HG/HE, and CS-series PLCs.

The Controller Link supports data links that enable data sharing and a message service that enables sending and receiving data when required. Data link areas can be freely set to create a flexible data link system and effectively use data areas.

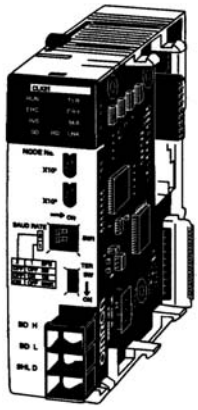

- High-capacity, flexible, and efficient data links
- Message service can transfer large quantities of data.
- Simple twisted-pair wiring
- Easily connects different PLC models and computers.
- Flexible inter-network connections
- Robust error-handling functions

■ Data Links

■ Message Service

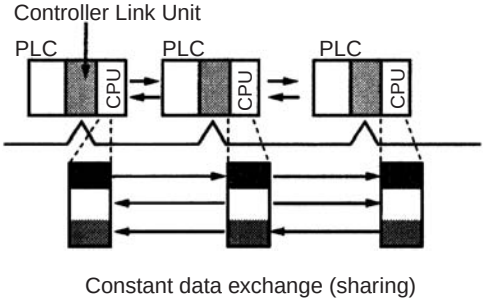

Constant data exchange (sharing)

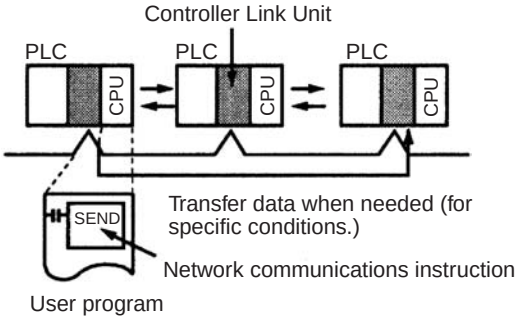

Unit Specifications

Item	Specifications
Name	Controller Link Unit
Model number	CQM1H-CLK21
Applicable CPU Units	CQM1H-CPU51/CPU61
Unit classification	Communications Unit
Connection location and number of Units	One Unit only. The Unit must be connected between the Power Supply Unit and the CPU Unit.
Current consumption	270 mA
Dimensions	32 × 110 × 107 mm (W × H × D) (without terminals)
Weight	170 g max.

Communications Specifications

Item	Specifications
Communications method	N:N token bus
Code	Manchester code
Modulation	Baseband code
Synchronization	Flag synchronization (conforms to HDLC frames)
Transmission path form	Multi-drop bus
Baud rate and maximum transmission distance	The maximum transmission distance varies with the baud rate as follows: 2 Mbps: 500 m 1 Mbps: 800 m 500 Kbps: 1 km
Media	Specified shielded twisted-pair cable Number of signal lines: 2, shield line: 1
Maximum number of nodes	32 nodes
Communications functions	Data links and message service
Number of data link words	Transmission area per node: 1,000 words max. Data link area in one CQM1H-series PLC (send/receive): 8,000 words max.
Data link areas	Bit areas (IR, AR, LR, CIO), data memory (DM), and extended data memory (EM)
Message length	2,012 bytes max. (including the header)
RAS functions	Polling node backup function Self-diagnosis function (hardware checking at startup) Echoback test and broadcast test (using the FINS command) Watchdog timer Error log function
Error control	Manchester code check CRC check (CCITT $X^{16} + X^{12} + X^5 + 1$)

Dedicated I/O Units

Summary of Dedicated I/O Units

Name	Specifications	Model number	Page
Analog Input Unit	4 analog input points –10 to +10 V, 0 to 10 V, 1 to 5 V, or 4 to 20 mA	CQM1-AD041	50
Analog Output Unit	2 analog output points –10 to +10 V or 0 to 20 mA	CQM1-DA021	51
Analog Power Supply Units	Power supply for Analog Input or Output Unit (required when using Analog Input or Output Unit)	CQM1-IPS01 (Supplies 1 Unit.)	52
		CQM1-IPS02 (Supplies 2 Units.)	
CompoBus/S Master Unit	128 points (64 inputs and 64 outputs), 64 points (32 inputs and 32 outputs), or 32 points (16 inputs and 16 outputs) selectable with a switch.	CQM1-SRM21-V1	53
DeviceNet I/O Link Unit	DeviceNet Slave: 32 points (16 inputs and 16 outputs)	CQM1-DRT21	56
B7A Interface Units	16 output points	CQM1-B7A02	58
	16 input points	CQM1-B7A12	
	32 output points	CQM1-B7A03	
	32 input points	CQM1-B7A13	
	16 input points and 16 output points	CQM1-B7A21	
Temperature Control Units	Thermocouple input (J/K), ON/OFF or advanced PID control, transistor (NPN) output, 2 loops	CQM1-TC001	61
	Thermocouple input (J/K), ON/OFF or advanced PID control, transistor (PNP) output, 2 loops	CQM1-TC002	
	Platinum resistance thermometer input (Pt, JPt), ON/OFF or advanced PID control, transistor (NPN) output, 2 loops	CQM1-TC101	
	Platinum resistance thermometer input (Pt, JPt), ON/OFF or advanced PID control, transistor (PNP) output, 2 loops	CQM1-TC102	
	Thermocouple input (K, J, L, T, R, S, B), ON/OFF or advanced PID control, manual operation, transistor (NPN) output, 4 loops	CQM1-TC201	
	Thermocouple input (K, J, L, T, R, S, B), ON/OFF or advanced PID control, manual operation, transistor (PNP) output, 4 loops	CQM1-TC202	
	Thermocouple input (K, J, L, T, R, S, B), heater burnout alarm, ON/OFF or advanced PID control, manual operation, transistor (NPN) output, 2 loops	CQM1-TC203	
	Thermocouple input (K, J, L, T, R, S, B), heater burnout alarm, ON/OFF or advanced PID control, manual operation, transistor (PNP) output, 2 loops	CQM1-TC204	
	Platinum resistance thermometer input (Pt100, JPt100), manual operation, ON/OFF or advanced PID control, transistor (NPN) output, 4 loops	CQM1-TC301	
	Platinum resistance thermometer input (Pt100, JPt100), manual operation, ON/OFF or advanced PID control, transistor (PNP) output, 4 loops	CQM1-TC302	
	Platinum resistance thermometer input (Pt100, JPt100), heater burnout alarm, manual operation, ON/OFF or advanced PID control, transistor (NPN) output, 2 loops	CQM1-TC303	
	Platinum resistance thermometer input (Pt100, JPt100), heater burnout alarm, manual operation, ON/OFF or advanced PID control, transistor (PNP) output, 2 loops	CQM1-TC304	
Safety Relay Unit	Emergency stop unit: 2 inputs/2 outputs, 4 general-purpose inputs	CQM1-SF200	64

Analog Input Unit
CQM1-AD041

The CQM1-AD041 Analog Input Unit retrieves four analog signals from sensors or measuring equipment. Use this Unit in combination with a Power Supply Unit.

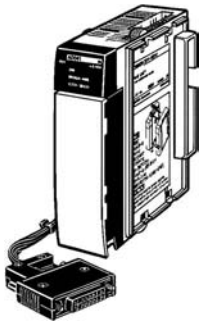

Performance Specifications

Item		Specification
No. of analog input points		4 or 2 (selected with DIP switch)
Input signal range	Voltage input	–10 to +10 V 0 to 10 V 1 to 5 V
	Current input	4 to 20 mA
Input impedance	Voltage input	1 MΩ min.
	Current input	250 Ω
Resolution		1/4000
Accuracy		±1.0%
Conversion speed		2.5 ms/1 pt.
Internal current consumption		80 mA max. at 5 V DC

System Configuration Example

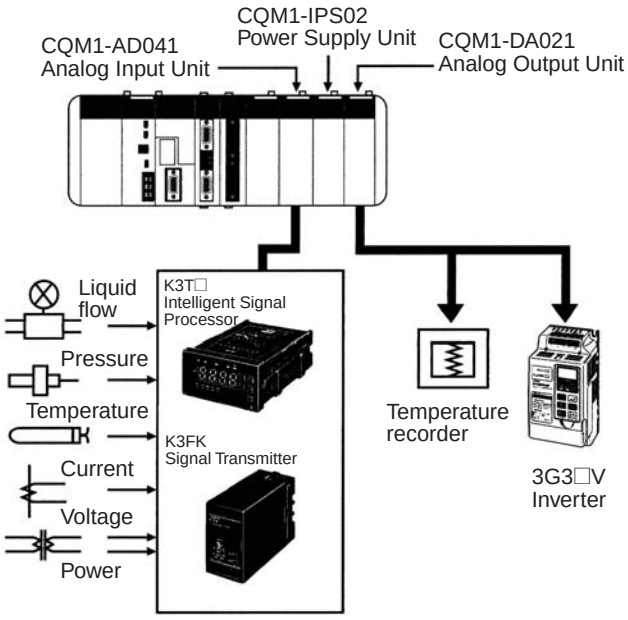

Analog Output Unit
CQM1-DA021

A single Analog Output Unit makes two-point digital-to-analog conversion possible at a speed of 0.5 ms/two points. Use the Analog Output Unit together with the Power Supply Unit.

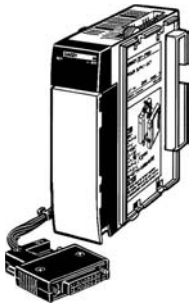

Performance Specifications

Item	Specification	
No. of analog output points	2	
Output signal range	Voltage output	–10 to 10 V
	Current output	0 to 20 mA
External output permissible load resistance	Voltage output	1 kΩ min.
	Current output	520 Ω max. (including wiring impedance)
External output impedance	Voltage output	0.5 Ω max.
Resolution	Voltage output	1/4096
	Current output	1/2048
Accuracy	±1.0%	
Conversion speed	0.5 ms/2 points	
Internal current consumption	90 mA at 5 V DC	

System Configuration Example

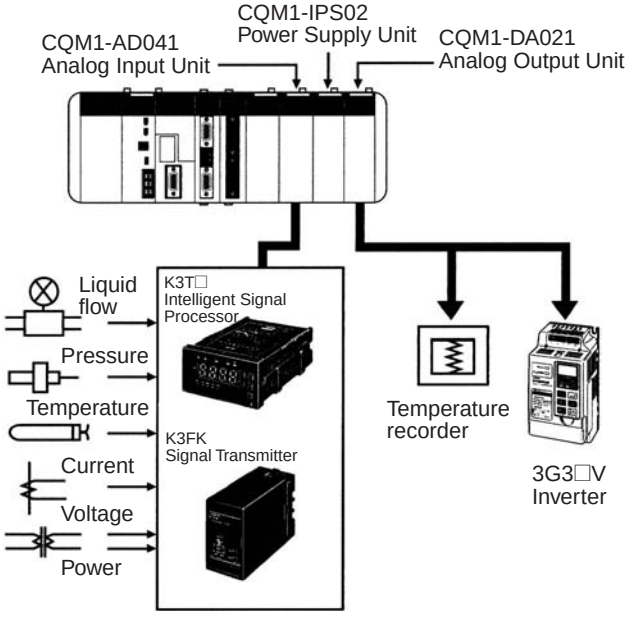

Power Supply Units

CQM1-IPS01/IPS02

The Analog Input and Output Units require a Power Supply Unit. There are two kinds of Power Supply Units (i.e., a Power Supply Unit connecting to a single Analog Unit and the other one connecting to two Analog Units).

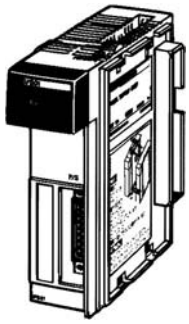

Specifications

Item	Specification	Internal current consumption
CQM1-IPS01	Connecting to a single Analog Unit.	5 V DC 420 mA max.
CQM1-IPS02	Connecting to two Analog Units.	5 V DC 950 mA max.

Note: The CQM1-IPS02 connects to a maximum of two Analog Input Units. A single Analog Input Unit and single Analog Output Unit can be connected to the CQM1-IPS02 Power Supply Unit. Two Analog Output Units cannot be connected to the CQM1-IPS02 Power Supply Unit. When using two Analog Output Units, prepare two CQM1-IPS01 Power Supply Units.

System Configuration Example

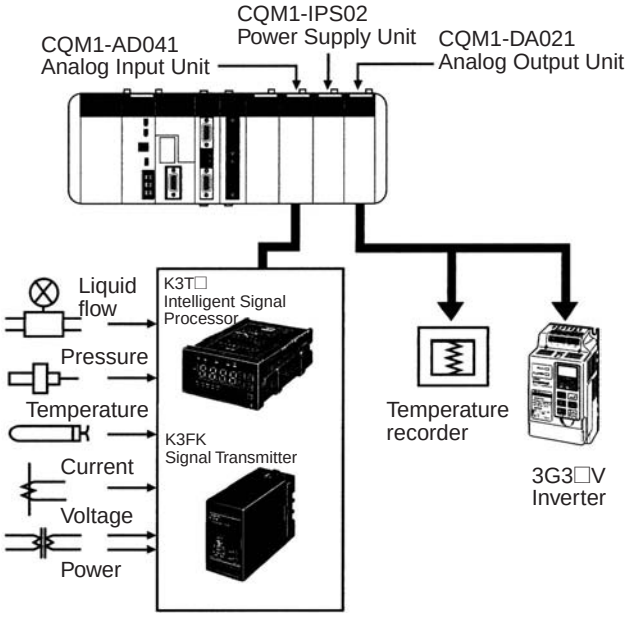

CompoBus/S Master Unit
CQM1-SRM21-V1

The CompoBus/S Master Unit supports both a High-speed Communications Mode and a Long-distance Communications Mode.

- Number of I/O points per Master:
  128 max.
  (may be set to 64 or 32 points)
- Number of Slaves per Master: 16 or 32
- Communications cycle time: 0.5 ms max. (baud rate: 750 kbps)
- Communications distance: 500 m max. (baud rate: 93.75 kbps)
- Supports Analog Terminal connections.

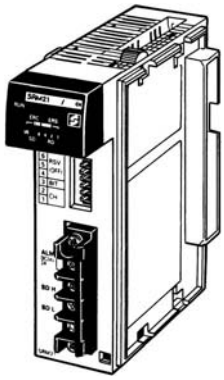

Communications Specifications

Communications protocol		Dedicated CompoBus/S protocol
Code		Manchester code
Connection method		Multi-drop, T-type bifurcation (both methods require external terminating resistor) (See note 1.)
Baud rate		750 kbps, 93.75 kbps (selectable with a DIP switch) (See note 2.)
Communications cycle time	**High-speed Communications Mode**	0.5 ms (with a maximum number of 8 Input and 8 Output Slaves) 0.8 ms (with a maximum number of 16 Input and 16 Output Slaves)
	Long-distance Communications Mode	4.0 ms (with a maximum number of 8 Input and 8 Output Slaves) 6.0 ms (with a maximum number of 16 Input and 16 Output Slaves)
Cable		Two-conductor cable (VCTF 0.75 x 2), four-conductor cable (VCTF 0.75 x 4), or dedicated flat cable
Communications distance	**High-speed Communications Mode**	Two-conductor VCTF cable

Communications Mode	Trunk line length	Branch line length	Total line length
High-speed mode	100 m max.	3 m max.	50 m max.
Long-distance mode	500 m max.	6 m max.	120 m max.

Dedicated flat cable/ four-conductor VCTF cable

Communications Mode	Trunk line length	Branch line length	Total line length
High-speed mode (see note 3)	30 m max.	3 m max.	30 m max.
Long-distance mode (see note 4)	Free branching (total cable length: 200 m max.)		

Max. number of connectable nodes		32
Error control		Manchester code, frame length, and parity checks

Note: **1.** An external Terminating Resistor is required.
2. Setting must be made using the DIP switch. (Change the DM setting for selecting the communications mode. Default setting: 750 kbps)
3. If the number of Slaves connected is smaller than 16, the trunk line length can be less than 100 m and the total line length can be less than 50 m.
4. There are no restrictions on the branching method, trunk line length, branch line length, or total line length. Connect the Terminating Resistor farthest from the Master.

Master Unit Specifications

Internal current consumption	180 mA max. at 5 V DC
Number of I/O points	128 points (64 inputs and 64 outputs), 64 points (32 inputs and 32 outputs), or 32 points (16 inputs and 16 outputs) selectable with a switch.
Number of occupied words	128 points:4 input words and 4 output words 64 points:2 input words and 2 output words 32 points:1 input word and 1 output word
Number of points per node	8 or 4 points (selectable with a switch)
Max. number of connectable Slaves	32 (with 4 points per node)
Status data	Alarm terminal output
Weight	200 g max.

Note: For details regarding CompoBus/S, refer to the CompoBus/S catalog (Catalog number: Q103-E1-□)

Connections with Flat Cable

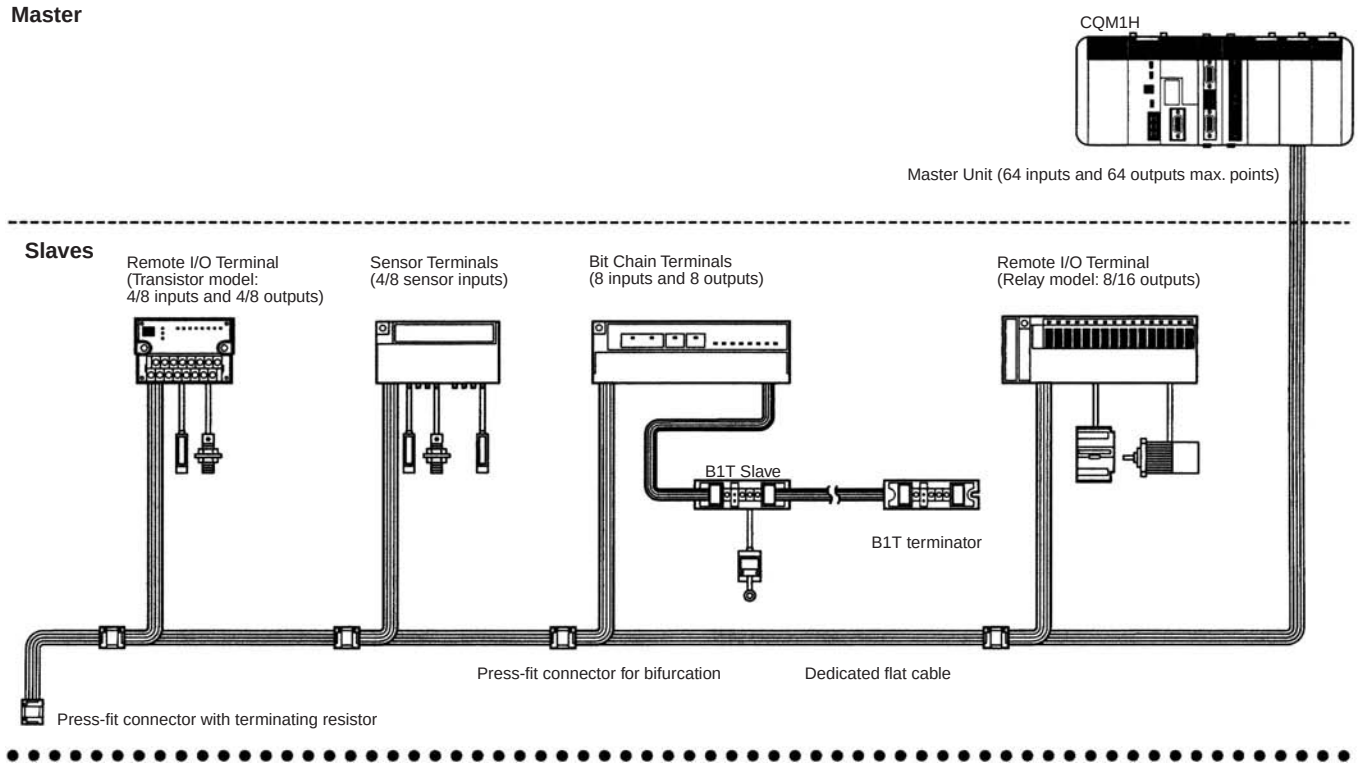

Connections with VCTF Cable

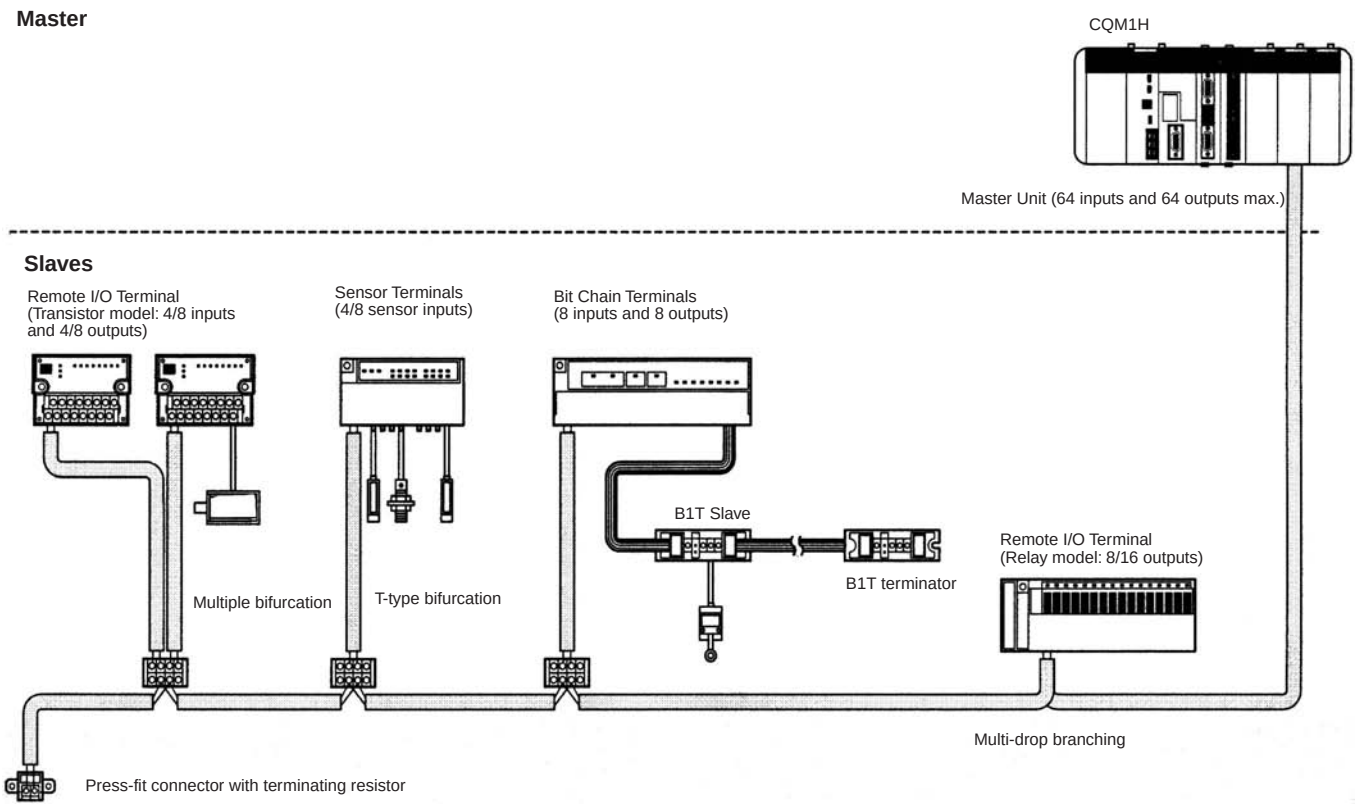

Note: For details regarding CompoBus/S, refer to the CompoBus/S catalog (Catalog number: Q103-E1-□)

DeviceNet I/O Link Unit
CQM1-DRT21

The DeviceNet I/O Link Unit is a DeviceNet slave that conforms to the multivender DeviceNet standards. DeviceNet I/O Link Units can be used to connect one or more CQM1H PLCs to a DeviceNet Master.

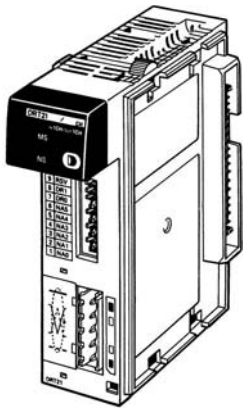

Performance Specifications

Communications power supply voltage	11 to 25 V DC supplied through communications connector
Current consumption	Communications power supply:40 mA max. at 24 V DC Internal circuit power supply:80 mA max. at 5 V DC
Number of I/O points	16 inputs and 16 outputs (32 in total)
Number of occupied words	1 input word and 1 output word (2 words in total)
Weight	185 g max.

Communications Specifications (Conforming to DeviceNet Standards)

Connection method	Multi-drop, T-type bifurcation (both require external terminating resistor)
Baud rate	500, 250, or 125 kbps (selectable with a switch)
Communications cycle time	9.3 ms with 16 Input Slaves (16 inputs) and 16 Output Slaves (16 outputs) at a speed of 500 kbps.
Cable	Dedicated 5-conductor cable (with two signal wires, two power wires, and a shield wire)
Communications distance	Baud rate / Max. network length (see note 1) / Branch line length / Total branch line length 500K bps / 100 m max. (see note 2) / 6 m max. / 39 m max. 250K bps / 250 m max. (see note 2) / 6 m max. / 78 m max. 125K bps / 500 m max. (see note 2) / 6 m max. / 156 m max.
Max. number of connectable nodes	CVM1 or CV Series: 64 nodes, C200HX/HG/HE: 50 nodes, C200HS: 32 nodes
Error control	CRC errors, node address duplication, scan line checks

Note: 1. The maximum network length refers to the distance between two nodes farthest from each other.
2. The communications distance will be 100 m or less if a thin dedicated cable is used for the trunk line.

Words Allocated by CQM1H Slaves

The CQM1H treats the I/O Link Unit as a single I/O Unit that has one input word and one output word. Words are allocated like I/O Units (i.e., input words from IR 001 and output words from IR 100 in order of the Units) beginning with the leftmost Unit.

■ Allocation Example

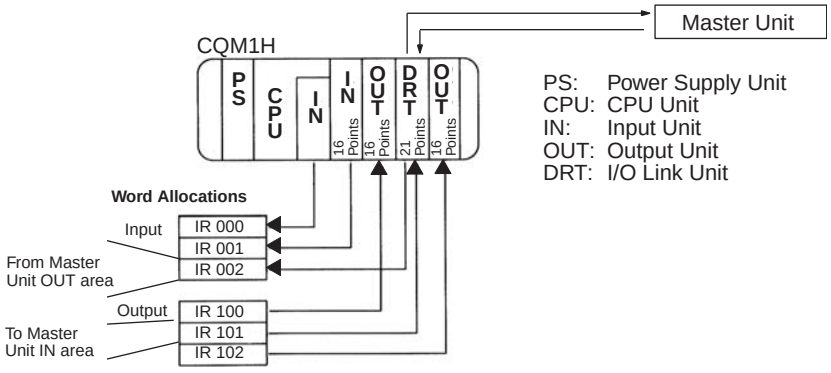

System Configuration Example

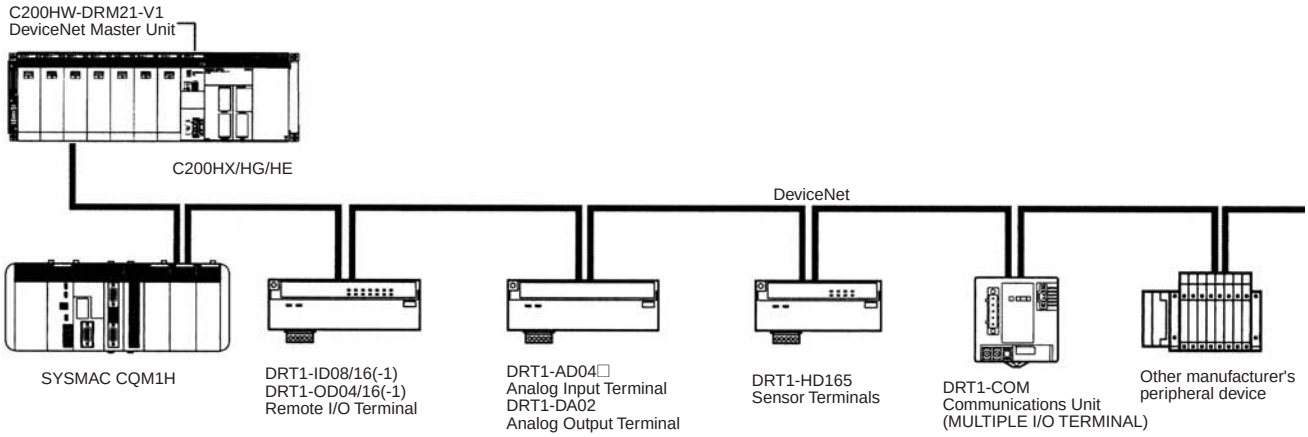

Note: For details on DeviceNet, refer to the DeviceNet catalog (Catalog number: Q102-E1-□)

B7A Interface Unit

CQM1-B7A02/03/12/13/21

A B7A Interface Unit can connect to I/O devices located up to 500 m way using a single cable. Units are available with a wide range of I/O capacities to help reduce wiring in just about any application. Connect to PLCs for simple digital communications, connect to a control panel, or connect to a robot. Whatever you connect to, you'll achieve more efficient wiring by reducing the number of connection cables required.

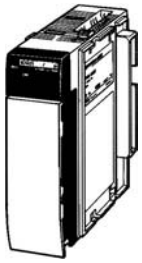

Performance Specifications

Item	Specification
I/O points	CQM1- B7A21:16 input points (see note 1), 16 output points B7A13:32 input points (see note 2) B7A03:32 output points B7A12:16 input points (see note 1) B7A02:16 output points
I/O word allocation	CQM1- B7A21:1 word each for input and output (2 words in total) B7A13:2 words for input B7A03:2 words for output B7A12:1 word for input B7A02:1 word for output
Communication method	Unidirectional, time-shared multiplex
Transmission distance	STANDARD: 500 m max. (see note 3) RAPID: 100 m max. (see note 3)
I/O delay	STANDARD: 19.2 ms (rated delay), 31 ms max. RAPID: 3 ms (rated delay), 5 ms max. (STANDARD or RAPID set via switch.)
Power consumption	100 mA at 5 V DC
External power supply	12 to 24 V DC ±10%, 0.11 A min. (excluding the power required by the B7A Link Terminals)
Weight	200 g max.
Dimensions	32 x 110 x 107 mm (W x H x D)

Note: 1. Input mode setting allows selection between 16-point input and 15-point+1 error input.

2. Input mode setting allows selection between 32-point input and 30-point+2 error input.

3. The transmission distance depends on the power supply wiring methods.

B7A Link Terminals

■ Input Units

Name	Model	Transmission delay time
Screw terminal models	B7A-T6□1	STANDARD (19.2 ms)
	B7AS-T6□1	
	B7A-T6□6	RAPID (3 ms)
	B7AS-T6□6	
Module models	B7A-T6D2	STANDARD (19.2 ms)
	B7A-T6D7	RAPID (3 ms)
PLC connector models	B7A-T□E3	STANDARD (19.2 ms)
	B7A-T□E8	RAPID (3 ms)

■ Output Units

Name	Model	Transmission delay time
Screw terminal model	B7A-R6□□1	STANDARD (19.2 ms)
	B7AS-R6□□1	
	B7A-R6□□6	RAPID (3 ms)
	B7AS-R6□□6	
	G70D-R6R□1-B7A	STANDARD (19.2 ms)
	G70D-R6M□1-B7A	
Module model	B7A-R6A52	STANDARD (19.2 ms)
	B7A-R6A57	RAPID (3 ms)
PLC connector models	B7A-R□A□3	STANDARD (19.2 ms)
	B7A-R□A□8	RAPID (3 ms)

Note: Combine B7A Interface Units and B7A Link Terminals with equal transmission delay times. Do not connect B7A Link Terminals with 10 points and mixed I/O points.

■ I/O Unit and 32-point Input Unit

Name		Model	Transmission delay time
Screw terminal model	I/O	B7AM-6BS	STANDARD (19.2 ms)/ RAPID (3 ms) (switchable)
	32 inputs (16 pts/circuit)	B7AS-T3BS	

System Configuration

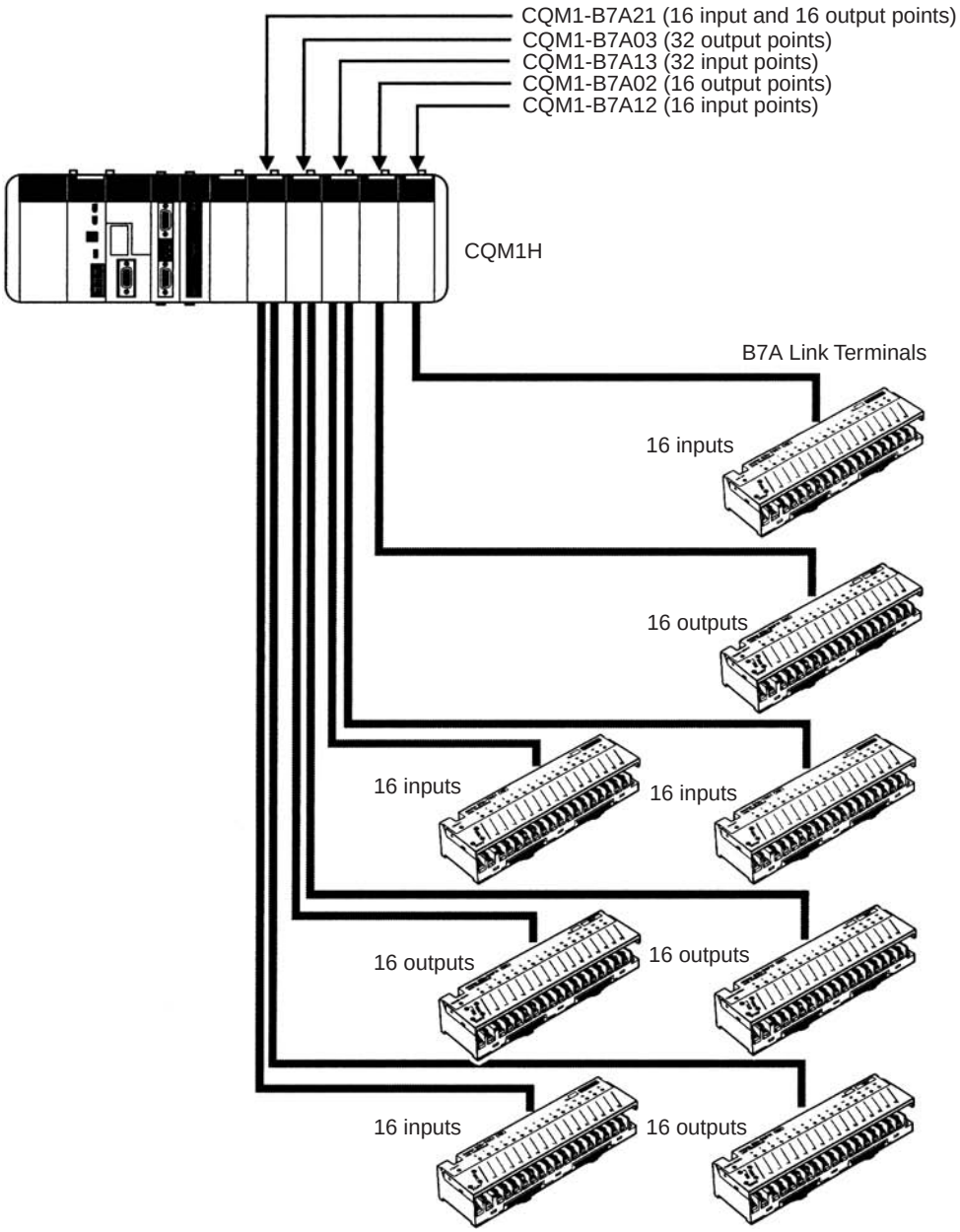

Temperature Control Units
CQM1-TC□0□

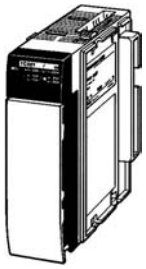

CQM1-TC00□/TC20□: Thermocouple Inputs
CQM1-TC10□/TC30□: Platinum Resistance Thermometer Inputs

- Temperature Control Units are available for either 4-loop temperature control or 2-loop temperature control, and Units with 2-loop temperature control provide a heater burnout alarm.
- Parameters can be set and data read for these Temperature Control Units by transferring commands. Therefore, only one word each is allocated to the Temperature Control Unit for inputs and outputs, enabling high-density temperature controls. Commands can be easily transferred using the TRANSFER I/O COMMAND instruction (see note 1) that was been added to the CQM1H CPU Units.

The PID with advanced feed-forward circuitry (2 degrees of freedom) assures stable temperature control. The Units can also be set to ON/OFF control.

Note: 1. Parameters can be set and data read for the CQM1-TC20□ and TC30□ using the new IOTC(––) instruction. The IOTC instruction is supported by the following combination of CPU Unit and Support Software: CX-Programmer version 2.0 or later and a CQM1H CPU Unit with a lot number of 0160 or later.

2. The SYSMAC Support Software can also be used by uploading the expansion instructions from a CPU Unit.

Performance Specifications

Item		Thermocouple input CQM1-TC00□	Platinum resistance thermometer input CQM1-TC10□	Thermocouple input CQM1-TC20□	Platinum resistance thermometer input CQM1-TC30□
Input	Input sensors and set point ranges	K: –200 to 1,300°C (–300 to 2,300°F) J: –100 to 850°C (–100 to 1,500°F)	JPt: –99.9 to 450.0°C (–99.9 to 800.0°F) Pt: –99.9 to 450.0°C (–99.9 to 800.0°F)	K, J, T, L, R, S, B (See the following table for temperature ranges.)	Pt100, JPt100 (See the following table for temperature ranges.)
	Number of control loops	Two (either 1 or 2 loops can be used)		4 loops or 2 loops with heater burnout alarm	
Control mode		ON/OFF or advanced PID control (2 degrees of freedom)		ON/OFF control, advanced PID control (2 degrees of freedom), or manual operation	
Setting and display accuracy		°C Ranges (Set point ±1% or ±3°C, whichever is larger) ±1 digit max. °F Ranges (Set point ±1% or ±6°F, whichever is larger) ±1 digit max.	°C Ranges (Set point ±1% or ±2°C, whichever is larger) ±1 digit max. °F Ranges (Set point ±1% or ±4°F, whichever is larger) ±1 digit max.	°C Ranges (Set point ±0.3% or ±1°C, whichever is larger) ±1 digit max. °F Ranges (Set point ±0.3% or ±2°F, whichever is larger) ±1 digit max.	0.1°C Ranges (Set point ±0.3% or ±0.8°C, whichever is larger) ±1 digit max. 0.1°F Ranges (Set point ±0.3% or ±1.6°F, whichever is larger) ±1 digit max. (See note 1.) 0.01°C Ranges (Set point ±0.3% or ±0.5°C, whichever is larger) ±1 digit max.
Temperature adjustment		0.8°C/°F		0.1 to 999.9°C/°F (0.1°C/°F unit)	
Proportional band		40.0°C/°F		0.1 to 999.9°C/°F (0.1°C/°F unit)	
Derivative time		240 s		0 to 3,999 s (1 s unit)	
Integral time		40 s		0 to 3,999 s (1 s unit)	
Manual output		---		0.0% to 100.0% (0.1% unit)	
Control period		20 s		1 to 99 s (1 s unit)	

Item		Thermocouple input CQM1-TC00□	Platinum resistance thermometer input CQM1-TC10□	Thermocouple input CQM1-TC20□	Platinum resistance thermometer input CQM1-TC30□
Input shift range		---		–99.9 to 999.9°C/°F (0.1°C/°F unit)	0.1°C Ranges –99.9 to 999.9°C/°F (0.1°C/°F unit) 0.01°C Ranges –9.99 to 99.99°C/°F (0.01°C/°F unit)
Sampling period		1 s		0.5 s	
Output	Output refresh period	1 s		0.5 s	
	Output form	NPN or PNP outputs (with short-circuit protection)		NPN or PNP outputs (with short-circuit protection)	
	Maximum switching capacity	100 mA, 24 V DC $^{+10\%}/_{-15\%}$		100 mA, 24 V DC $^{+10\%}/_{-15\%}$	
	Leakage current	0.3 mA max.		0.1 mA max.	
	Residual voltage	3.0 V max.		0.8 V max.	
External supply voltage		15 mA min., 24 V DC $^{+10\%}/_{-15\%}$		30 mA min., 24 V DC $^{+10\%}/_{-15\%}$	
Internal current consumption		220 mA max. at 5 V DC		190 mA max. at 5 V DC	
Heater burnout alarm	Maximum heater current	---		50 A, single-phase AC	
	Input current monitoring accuracy	---		±5 % FS ±1 digit	
	Heater burnout alarm setting	---		0.1 to 49.9 A (0.1 A unit) (See note 1.)	
	Minimum ON time for detection	---		200 ms (See note 2.)	

Note: 1. Heater burnout detection will be disabled if the alarm is set to 0.0 A. The heater burnout alarm output will turn ON if the alarm is set to 50.0 A.

2. If the control output is ON for less than 200 ms, heater burnout will not be detected and the heater current will not be measured.

Temperature Ranges

■ Units for Thermocouples

Input type	Code No.	°C	°F
K	0	–200 to 1300	–300 to 2300
K	1	0.0 to 500.0	0.0 to 900.0
J	2	–100 to 850	–100 to 1500
J	3	0.0 to 400.0	0.0 to 750.0
T	4	–200.0 to 400.0	–300.0 to 700.0
L	5	–100 to 850	–100 to 1500
L	6	0.0 to 400.0	0.0 to 750.0
R	7	0 to 1700	0 to 3000
S	8	0 to 1700	0 to 3000
B	9	100 to 1800	300 to 3200

■ Units for Platinum Resistance Thermometers

Input type	Code No.	°C	°F
Pt100	0	–200.0 to 650.0	–300.0 to 1200.0
JPt100	1	–200.0 to 650.0	–300.0 to 1200.0
Pt100	2	–20.00 to 250.00	Do not set.
JPt100	3	–20.00 to 250.00	

Example System Configuration

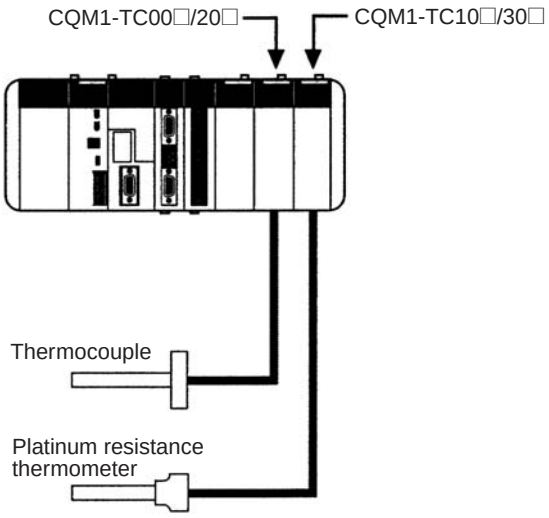

Output Circuits

CQM1-TC□01/TC□03: Sinking Outputs (NPN)

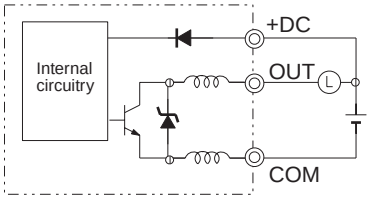

CQM1-TC□02/TC□04: Sourcing Outputs (PNP)

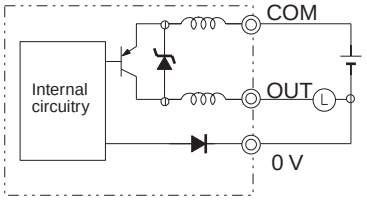

Current Detector Ratings

Item	E54-CT1	E54-CT3
Continuous maximum heater current	50 A	
Range for accurate measurement	0 to 30 A	0 to 50 A
Withstand voltage	1,000 VAC	
Shock resistance	50 Hz (Approx. 98 m/s^2)	
Hole diameter	5.8 mm	12.0 mm
Weight	Approx. 11.5 g	Approx. 50 g
Accessories	None	Contactors: 2 Plugs: 2

Safety Relay Unit
CQM1-SF200

- Reduces wiring effort and installation space for safety circuits.
- Monitors the following four statuses of the safety circuit

1. Safety Circuit Output Status
   Monitors if the safety circuit is operating and producing outputs.
2. Safety Circuit Power Status
   Monitors the status of the power supply to the safety circuit.
3. K1 Relay Operating Status
4. K2 Relay Operating Status
   Monitors the status of the internal relays that form the safety circuit. This helps troubleshooting safety circuit problems.

- General-purpose Inputs
  In addition to the safety circuit, a general-purpose input section (4 inputs and 1 common) is provide, which can be used for general controls.

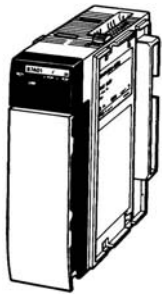

Performance Specifications

Item		Specifications
Contact resistance (See note 1.)		100 mΩ
Operating time (See note 2.)		300 ms max.
Response time (See notes 2 and 3.)		10 ms max.
Durability	Mechanical	5 million operations min. (switching frequency: 7,200 times/hour)
	Electrical	100,000 operations min. (rated load, switching frequency: 1,800 times/hour)
Error rate (P level: reference value)		1 mA at 5 VDC
Weight		260 g max.

Note: 1. Measurement conditions: 1 A at 5 VDC voltage drop method
2. Bounce time is not included.
3. The response time is from when the input is turned OFF to when the main contact turns OFF.

Ratings (Safety Circuit)

Power Supply Section

Item	Specifications
Supply voltage	24 VDC
Permissible voltage fluctuation range	–15%/+10% of supply voltage
Power consumption	24 VDC: 1.7 W max.

Input Section

Item	Specifications
Input current	75 mA max.

Switching Section

Item	Specifications
Load	Resistive load (cos=ϕ1)
Rated load	5 A at 250 VAC
Rated switching current	5 A

Ratings (General-purpose Input)

Item	Specifications
Rated input voltage	24 VDC –15%/+10%
Input impedance	4.0 kΩ
Input current	6 mA typical (24 VDC)
ON voltage/ON current	14.4 VDC min./3 mA min.
OFF voltage/OFF current	5 VDC max./1 mA max.
ON/OFF response time	8 ms max. (selectable from 1 to 128 ms using System Setup.)
Number of circuits	4 inputs and 1 common
Number of points that turn ON simultaneously	100% simultaneously ON
Internal current consumption	50 mA max.

Control Input Specifications

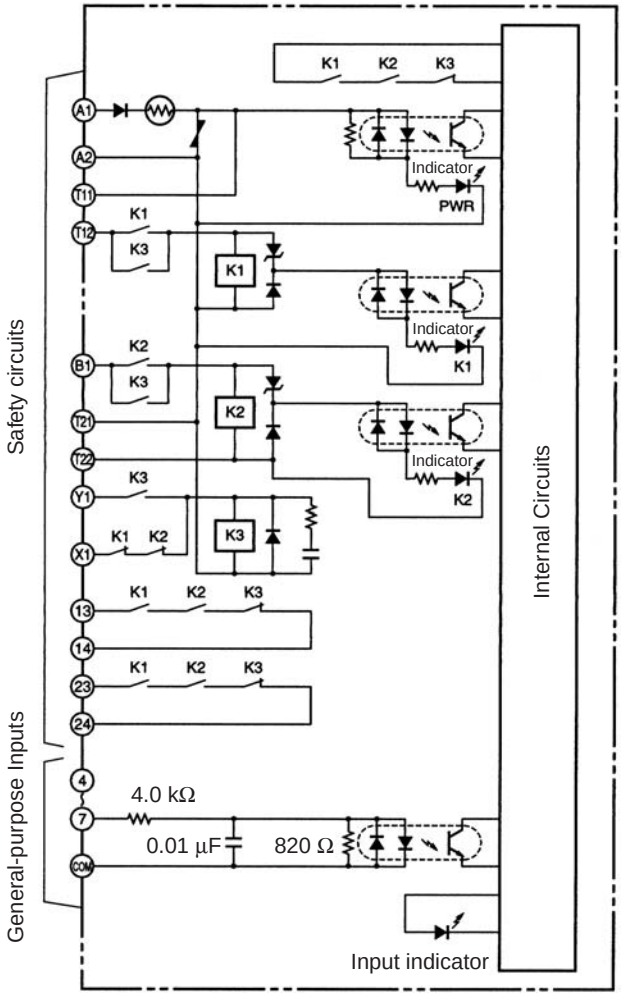

Ordering Information

■ International Standards

The products shown in the attached tables are those that conform to the UL, CSA, cULus, cUL, NK, Lloyd's Register, and EC Directives as of the end of September 2001.
(U: UL, C: CSA, UC: cULus, CU: cUL, N: NK, L: Lloyd, CE: EC Directives)
Please contact OMRON representative for application conditions.

■ EMC Directives

Applicable Standards

EMI:EN50082-2

EMS:EN61131-2 and EN61000-6-2 (See note.)

PLCs are electrical devices that are incorporated in machines and manufacturing installations. OMRON PLCs conform to the related EMC standards so that the devices and machines into which they are built can more easily conform to EMC standards. The actual PLCs have been checked for conformity to EMC standards. Whether these standards are satisfied for the actual system, however, must be checked by the customer.

EMC-related performance will vary depending on the configuration, wiring, and other conditions of the equipment or control panel in which the PLC is installed. The customer must, therefore, perform final checks to confirm that the overall machine or device conforms to EMC standards.

Low Voltage Directive

Applicable Standard

EN61131-2

Devices that operate at voltages from 50 to 1,000 VAC or 75 to 150 VDC must satisfy the appropriate safety requirements. With PLCs, this applies to Power Supply Units and I/O Units that operate in these voltage ranges.

These Units have been designed to conform to EN61131-2, which is the applicable standard for PLCs.

Power Supply Units

Name	Specifications				Model	International standards
	Rated voltage	Allowed voltage range	Output capacity	Service power supply		
AC Power Supply Units	100 to 240 V AC 50/60 Hz	85 to 265 V AC	18 W	None	CQM1-PA203	U, C, N, L, CE
			30 W	24 V DC 0.5 A	CQM1-PA206	U, C, L, N
	110/230 V AC 50/60 Hz	80 to 138 V AC 160 to 276 V AC	30 W	24 V DC 0.5 A	CQM1-PA216	N, L, CE
DC Power Supply Units	24 V DC	20 to 28 V DC	30 W	---	CQM1-PD026	UC, N, L, CE

CPU Units (with 16 built-in DC input points)

Specifications						Model	International standards
Memory capacity	I/O capacity	Built-in inputs	Built-in RS-232C port	Support of Inner Boards	Support of Controller Link Unit		
Program: 3.2 Kwords DM area: 3 Kwords	256 points	16 DC inputs	No	No	No	CQM1H-CPU11	U, C, N, L, CE
			Yes			CQM1H-CPU21	
Program: 7.2 Kwords DM area: 6 Kwords	512 points			Yes	Yes	CQM1H-CPU51	UC, N, L, CE
Program: 15.2 Kwords DM area: 6 Kwords EM area: 6 Kwords						CQM1H-CPU61	U, C, N, L, CE

Inner Boards

Name	Specifications	Model	International standards
High-speed Counter Board	4 pulse inputs (high-speed counter) at 500 kHz max. 4 external outputs	CQM1H-CTB41	U, C, N, L, CE
Pulse I/O Board	2 pulse inputs, Single-phase: 50 kHz, Differential phase: 25 kHz 2 pulse outputs, 50 kHz max. Both fixed and variable duty factors are supported.	CQM1H-PLB21	U, C
Absolute Encoder Interface Board	2 absolute encoder (gray code binary) inputs (4 kHz)	CQM1H-ABB21	U, C, N, L
Analog Setting Board	4 analog settings	CQM1H-AVB41	U, C, N, L, CE
Analog I/O Board	4 analog inputs of 0 to 5 V, 0 to 20 mA, –10 to +10 V 2 analog outputs of 0 to 20 mA, –10 to +10 V	CQM1H-MAB42	CE
Serial Communications Board	One RS-232C port and one RS-422A/485 port	CQM1H-SCB41	U, C, N, L, CE

Communications Units

Name	Specifications	Model	International standards
Controller Link Unit (Wired)	Data link (Maximum number of words per node: 8,000) Message communications (SEND/RECV/CMND instructions)	CQM1H-CLK21	U, C, CE

Memory Cassettes

Memory	Memory capacity/Clock function		Model	International standards
Flash memory	16 Kwords		CQM1H-ME16K	U, C, N, L, CE
		with clock	CQM1H-ME16R	
EEPROM	8 Kwords		CQM1-ME08K	UC, N, L, CE
		with clock	CQM1-ME08R	
	4 Kwords		CQM1-ME04K	
		with clock	CQM1-ME04R	U, C, N, L, CE
EPROM Memory Cassette (Memory chip not included)	Cassette with IC socket only (EPROM chip sold separately)		CQM1-MP08K	
		with clock	CQM1-MP08R	
EPROM chip	256 KB (16 Kwords), 150 ns, 27256 IC or equivalent, 12.5 V		ROM-JD-B	CE
	512 KB (32 Kwords), 150 ns, 27512 IC or equivalent, 12.5 V		ROM-KD-B	

Available Models

Memory	Memory capacity/Clock function		Model	International standards
I/O Control Unit	Connects to right-hand side of CPU Block		CQM1H-IC101	U, C, CE
I/O Interface Unit	Connects to left-hand side of Expansion I/O Block		CQM1H-II101	
I/O Extension Cable	For connection with I/O Control Unit and I/O Interface Unit	Cable length: 0.3 m	CS1W-CN313	L, CE
		Cable length: 0.7 m	CS1W-CN713	

I/O Units

■ Input Units

Input type	Specifications	Model	International standards
DC inputs	8 points, 12 to 24 V DC (independent commons, 1 point/common × 8 circuits)	CQM1-ID211	U, C, N, L, CE
	16 points, 12 V DC (16 points/common × 1 circuit)	CQM1-ID111	U, C
	16 points, 24 V DC (16 points/common × 1 circuit)	CQM1-ID212	UC, N, L, CE
	32 points, 12 V DC (32 points/common)	CQM1-ID112	U, C
	32 points, 24 V DC (32 points/common)	CQM1-ID213	U, C, N, L, CE
	32 points, 24 V DC (32 points/common × 1 circuit)	CQM1-ID214	U, C, CE
AC inputs	8 points, 100 to 120 V AC (8 points/common)	CQM1-IA121	U, C, L, CE
	8 points, 200 to 240 V AC (8 points/common)	CQM1-IA221	

■ Output Units

Output type	Specifications	Model	International standards
Contact outputs	8 points, 250 V AC (cosϕ = 1.0/0.4)/24 V DC 2 A (16 A/Unit), independent commons	CQM1-OC221	U, C, N, L
	16 points, 250 V AC (cosϕ = 1.0/0.4)/24 V DC 2 A (8 A/Unit)	CQM1-OC222	UC, N, L
	8 points, 250 V AC 2 A (cosϕ = 1.0/0.4)/24 V DC 2 A, independent common	CQM1-OC224	CE
Transistor outputs	8 points, 24 V DC, 2A (5 A/Unit), 8 points/common	CQM1-OD211	U, C, N, L, CE
	16 points, 50 mA at 4.5 V DC to 300 mA at 26.4 V DC, 16 points/common	CQM1-OD212	
	32 points, 16 mA at 4.5 V DC to 100 mA at 26.4 V DC	CQM1-OD213	
	16 points, 24 V DC, 300 mA, PNP outputs	CQM1-OD214	U, C, L, CE
	8 points, 24 V DC, 1.0 A, PNP outputs (4 A/Unit), short-circuit protection	CQM1-OD215	
	32 points, 24 V DC, 0.5 A, PNP outputs (5 A/Unit), short-circuit protection	CQM1-OD216	CE
AC outputs	8 points, 0.4 A at 100 to 240 V AC, two circuits with 4 points/common each	CQM1-OA221	U, C, L
	6 points, 0.4 A at 100 to 240 V AC, two circuits with 4 points/common and 2 points/common	CQM1-OA222	CE

Dedicated I/O Units

Name	Specifications		Model	International standards
CompoBus/S Master Unit	Number of I/O points per Master: 128 (64 inputs and 64 outputs) Communications cycle time: 0.5 ms min.		CQM1-SRM21-V1	U, C, CE
DeviceNet I/O Link Unit	Number of I/O points: 16 inputs and 16 outputs		CQM1-DRT21	
Analog Input Unit	Analog inputs: 4 points		CQM1-AD041	U, C, N, CE
Analog Output Unit	Analog outputs: 2 points		CQM1-DA021	
Power Supply Units	Required for Analog Input and Output Units.	For one Analog Unit	CQM1-IPS01	
		For two Analog Units	CQM1-IPS02	
B7A Interface Unit	16 outputs		CQM1-B7A02	---
	16 inputs		CQM1-B7A12	U, C
	32 outputs		CQM1-B7A03	
	32 inputs		CQM1-B7A13	
	16 inputs and 16 outputs		CQM1-B7A21	---
Temperature Control Units	Thermocouple input, transistor (NPN) output, 2 loops		CQM1-TC001	U, C
	Thermocouple input, transistor (PNP) output, 2 loops		CQM1-TC002	
	Platinum resistance thermometer, transistor (NPN) output, 2 loops		CQM1-TC101	
	Platinum resistance thermometer, transistor (PNP) output, 2 loops		CQM1-TC102	
	Thermocouple input, transistor (NPN) output, 4 loops		CQM1-TC201	U, C, CE
	Thermocouple input, transistor (PNP) output, 4 loops		CQM1-TC202	U, C, CE
	Platinum resistance thermometer, transistor (NPN) output, 2 loops (with heater burnout alarm)		CQM1-TC203	U, C, CE
	Platinum resistance thermometer, transistor (PNP) output, 2 loops (with heater burnout alarm)		CQM1-TC204	U, C, CE
	Thermocouple input, transistor (NPN) output, 4 loops		CQM1-TC301	U, C, CE
	Thermocouple input, transistor (PNP) output, 4 loops		CQM1-TC302	U, C, CE
	Platinum resistance thermometer, transistor (NPN) output, 2 loops (with heater burnout alarm)		CQM1-TC303	U, C, CE
	Platinum resistance thermometer, transistor (PNP) output, 2 loops (with heater burnout alarm)		CQM1-TC304	U, C, CE
Safety Relay Unit	Emergency stop unit: 2 inputs/2 outputs, 4 general-purpose inputs		CQM1-SF200	U C, CE

DIN Track

Name	Specifications		Model	International standards
Mounting Tracks	Track length: 50 cm	Height: 7.3 mm	PFP-50N	L
	Track length: 1 m		PFP-100N	
	Track length: 1 m	Height: 16 mm	PFP-100N2	
End Plate	Fasten mounting brackets on both sides of the PLC to prevent it from sliding left or right. Two End Plates are provided with the CPU Unit.		PFP-M	

Note: DIN Track products must be ordered in lots of ten.

Programming Devices and Accessories

■ Programming Consoles

Name		Specifications	Model	International standards
Programming Consoles		2-m Connecting Cable included (No other Connecting Cables required.)	CQM1H-PRO01-E	U, C, CE
		2-m Connecting Cable included (compatible with C-series PLCs) The CS1W-CN114 peripheral port conversion cable must be purchased separately (see below).	CQM1-PRO01-E	U, C, N, CE
		Requires a separate Connecting Cable. The C200H-CN222 conecting cable, C200HS-CN222 connecting cable, or CS1W-CN114 peripheral port conversion cable must be purchased separately (see below).	C200H-PRO27-E	U, C, N, CE
	Connecting Cables	Cable length: 2 m	C200H-CN222	N
		Cable length: 2 m (for CPUs complying with EC directives)	C200HS-CN222	CE
Peripheral Port Conversion Cable		Connects the peripheral port on the CQM1H to a personal computer or Programming Console through a CQM1-CIF01/02 cable.	CS1W-CN114	CE

■ CX-Programmer (Windows)

Name	Specifications	Model	International standards
CX-Programmer (V1.2 or later)	CD-ROM, OS: Windows 95, 98, Me, NT4.0, 2000, or XP	WS02-CXPC1-E-V3□	---

■ CX Protocol (Windows)

Name	Specifications	Model	International standards
CX-Protocol	Protocol macro software OS: Windows 95, 98, Me, NT4.0, 2000, or XP	WS02-PSTC1-E	---

■ Support Software

Product	Model	International standards
Expansion Memory Unit	CPM1-EMU01-V1	---
EEPROM (256 K)	EEROM-JD	---

Maintenance Products

Product	Function	Model	International standards
Battery	Backs up memory in the CPU Unit.	CPM2A-BAT01	---
End Cover	Connects to the I/O Unit located on the extreme right	CQM1H-TER01	U, C, CE

Programming Device Connecting Cables

Name	Specifications	Model	International standards
Connecting Cables (Peripheral port to Programming Device (computer))	Connects to Programming Console or CQM1-CIF01/02.	CS1W-CN114	CE
	Connects to a D-Sub 9-pin port of an IBM PC/AT or compatible computer. (Use together with the CS1W-CN114.) Length: 3.3 m	CQM1-CIF02	U, C, N, L, CE
Connecting Cables (Peripheral port to RS-422)	Peripheral port to RS-422 conversion cable (length: 0.2 m)	CQM1H-CIF12	U, C, CE
	D-Sub 9-pin computer cable (length: 2 m)	CS1W-CN226	CE
	D-Sub 9-pin computer cable (length: 6 m)	CS1W-CN626	CE
	D-Sub 9-pin receptacle (length: 0.1 m)	CS1W-CN118	CE
Connecting Cables (RS-232C port to Programming Device (computer))	D-Sub 9-pin computer cable (length: 2 m)	XW2Z-200S-V	---
	D-Sub 9-pin computer cable (length: 2 m) (anti-static)	XW2Z-200S-CV	---
	D-Sub 9-pin computer cable (length: 5 m)	XW2Z-500S-V	---
	D-Sub 9-pin computer cable (length: 5 m) (anti-static)	XW2Z-500S-CV	---
USB-Serial Conversion Cable	Converts between USB and RS-232C, cable length: 0.5 m. PC Driver included (CD-ROM).	CS1W-CIF31	N, CE
RS-422 Adapter	Converts peripheral port levels, cable length: 0.2 m.	CQM1-CIF121	U, C, CE

Peripheral Devices

Labor-saving Connectors

Converts the wiring of the 32-point I/O Unit connector into a terminal block, simplifying wiring and reducing the amount of wiring within the panel.

Units with I/O Connectors

■ Cables and Connectors

Connector/Terminal Conversion Unit	Connecting Cable	PLC Unit	
XW2B-40G5 XW2B-40G4 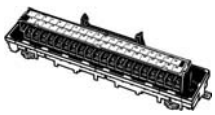	XW2Z-□□□B	CQM1-ID213 CQM1-ID214 CQM1-OD213 CQM1-OD216	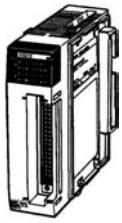
XW2C-20G5-IN16 (see note) 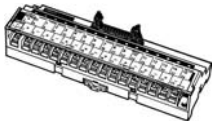	XW2Z-□□□D	CQM1-ID213 CQM1-ID214	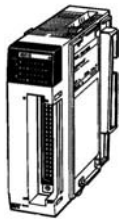

Note: This Unit is for an Input Unit only, with LED input indicators and NPN inputs.

■ Servo Relay Unit and Cables

Servo Driver	Connecting Cables	Servo Relay Unit	Relay Cable	PLC CPU Unit
SMART STEP R7D-AP□□□	XW2Z-□□□J-B5 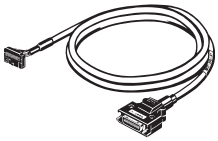	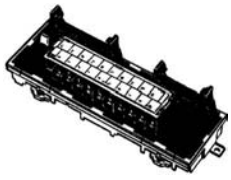 XW2B-20J6-3B	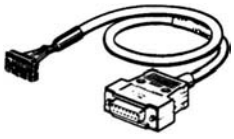 XW2Z-□□□J-A3	CQM1H-CPU61/51 (CQM1H-PLB21)
W-series 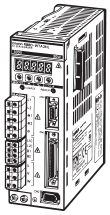 R88D-WT□□H□	XW2Z-□□□J-B4 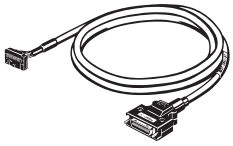			

I/O Blocks and Cables

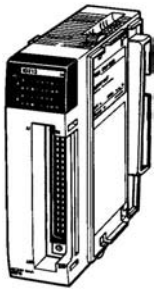

CQM1-ID213/214

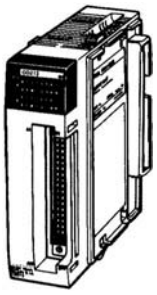

CQM1-OD213

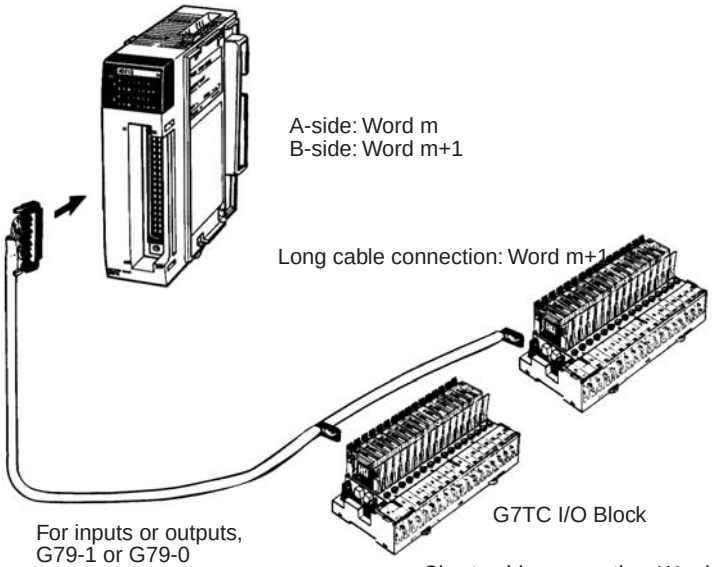

Cables with Connectors

Each Cable connects to two I/O Blocks.

Model		Length (mm)	
For inputs	For outputs	Long	Short
G79-I100C-75	G79-O100C-75	1,000	750
G79-I150C-125	G79-O150C-125	1,500	1,250
G79-I200C-175	G79-O200C-175	2,000	1,750
G79-I300C-275	G79-O300C-275	3,000	2,750
G79-I500C-475	G79-O500C-475	5,000	4,750

I/O Blocks

Model	Specifications	
G7TC-IA16	16 inputs	100/110 V AC, 200/220 V AC
G7TC-ID16		24 V DC
G7TC-OC16	16 outputs	Contact output: 24 V DC, 5 A/2 A (cos ϕ = 1/0.4) 220 V AC, 2 A/1 A (cos ϕ = 1/0.4)
G7VC-OC16		Contact output, 24 V DC/220 V AC 2 A (cos ϕ = 1.0) 0.8 A (cos ϕ = 0.4)
G7VC-OA16		SSR, AC output: 75 to 264 V AC, 0.1 to 0.5 A
G7VC-OD16		SSR, DC output: 3 to 26 V DC, 0.1 to 0.5 A

Note: For more details on I/O Blocks and I/O Terminals, refer to the *I/O Terminal Series Catalog (X44-E1-□)*.

Direct DIN Track-mounting Power Supplies

S82K-series Power Supplies

The S82K Power Supplies provide DC power to a variety of I/O devices. Use S82K Power Supplies when using a CQM1H that requires a DC power supply or when the CQM1H cannot supply enough power to the connected I/O devices.

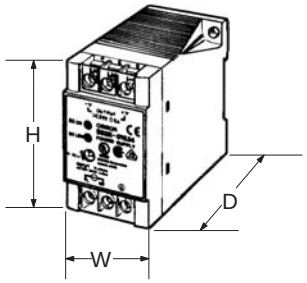

Power Supply Specifications

Model	Input voltage	Output current/voltage	Power rating	Dimensions
S82K-01505	100 to 200 V AC	5 V DC, 2.5 A	15 W	75 × 45 × 96 mm (H×W×D)
S82K-01512		12 V DC, 1.2 A		
S82K-01524		24 V DC, 0.6 A		

Model	Input voltage	Output current/voltage	Power rating	Dimensions
S82K-03012	100 or 200 V AC (switchable)	12 V DC, 2.5 A	30 W	75 × 90 × 96 mm (H×W×D)
S82K-03024		24 V DC, 1.3 A		
S82K-05024		24 V DC, 2.1 A	50 W	
S82K-10024		24 V DC, 4.1 A	100 W	75 × 135 × 96 mm (H×W×D)

Expansion Memory Unit
CPM1-EMU01-V1

The Expansion Memory Unit can be used to upload and download user programs and data memory with the press of a button allowing simply program maintenance.

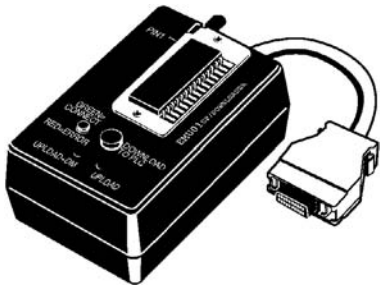

Connections

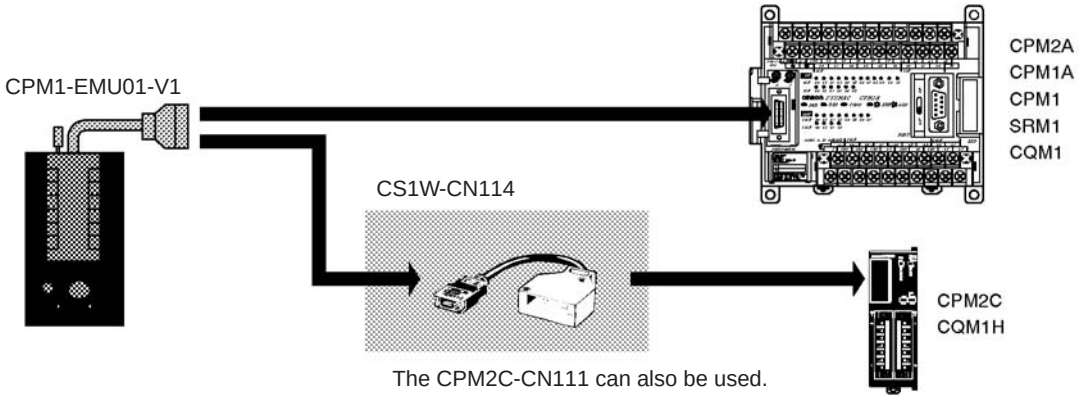

The CPM2C-CN111 can also be used.

Specifications

Item	Specification
Supported PCs	CPM1, CPM1A, CPM2A, CPM2C, SRM1 (-V2), CQM1, CQM1H
Read/Write memory areas	User program: 15.2 Kwords max. Data memory: DM 6144 to DM 6655 (Read-only DM and PC Setup) Expansion instructions: 18 instructions
Connector	Connector compatible with peripheral port on CPM1, CPM1A, CPM2A, SRM1 (-V2), and CQM1 PCs. For CPM2C and CQM1H PCs, connect via CS1W-CN114 or CPM2C-CN111 Connecting Cable.
EEPROM (See note.)	256-Kbit EEPROM ATMEL: AT28C256 OMRON: EEROM-JD
Current consumption	129 mA max.
Dimensions	Main body (not including cables or connectors): 57 × 92 × 38 mm (W × H × D)
Weight	200 g max. (not including EEPROM)

Note: The EEPROM must be purchased separately.

Dimensions

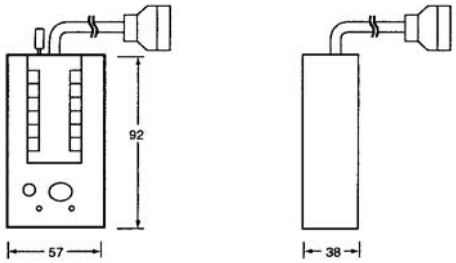

Memory Areas

The memory areas that are uploaded or downloaded vary with the button used as shown in the following table.

Area	Button		
	UPLOAD + DM	UPLOAD	DOWNLOAD TO PLC
Ladder program and expansion instructions	Read from PC to EEPROM.	Read from PC to EEPROM.	All contents of EEPROM written to PC.
DM 6144 to DM 6655		Not affected.	

For details on program size, DM area, and the availability of expansion instructions, refer to the relevant PC manual.

Absolute Rotary Encoders
E6C2-AG5C

Robust Rotary Encoders Satisfy IP64f Standards and Are Easy to Use with the SYSMAC Cam Positioners.

- E6C2-A Series
- Provides IP64f (drip-proof) enclosure rating.
- Robust shaft 78.4N/49N
- High resolution of 1,024 provides optimal angle control when used in combination with the SYSMAC Cam Positioner.
- Space-saving size (50-mm dia. x 38-mm length)

Ordering Information

■ Rotary Encoder

Appearance	Connection method	Connecting device	Resolution per rotation	Model
	Cable	Programmable Controller	256, 360, 720, 1,024	E6C2-AG5C
	Connector	H8PS Cam Positioner (connector included)	256	E6C2-AG5C-C

Ratings

Supply voltage	12 V DC (–10%) to 24 V DC (+15%), ripple (p-p) of 5% max.
Current consumption	100 mA max.
Resolution (per rotation)	256, 360, 720, or 1,024
Output code	Gray binary
Output type	NPN open collector output
Output capacity	Applied voltage: 30 V DC max., Sink current: 35 mA max, Residual voltage: 0.4 V max
Max. response frequency	20 kHz

Connecting Cable for CQM1H-ABB21 (Sold Separately)

E69-DC5

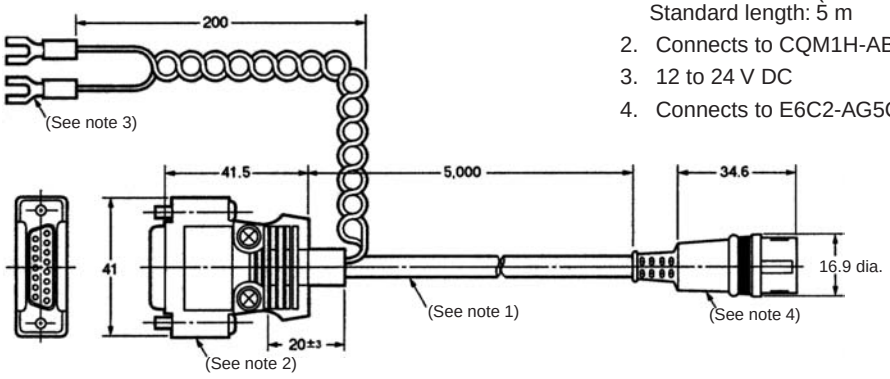

Note:
1. Oil-resistant, vinyl-insulated, round shielded cord with external dia. of 6 (12/7 0.18 dia.)
   Standard length: 5 m
2. Connects to CQM1H-ABB21.
3. 12 to 24 V DC
4. Connects to E6C2-AG5C-C Encoder

Compatible Models: E6CP-AG5C-C, E6C2-AG5C-C, and E6F-AG5C-C

Read and Understand this Catalog

Please read and understand this catalog before purchasing the product. Please consult your OMRON representative if you have any questions or comments.

Warranty and Limitations of Liability

WARRANTY

OMRON's exclusive warranty is that the products are free from defects in materials and workmanship for a period of one year (or other period if specified) from date of sale by OMRON.

OMRON MAKES NO WARRANTY OR REPRESENTATION, EXPRESS OR IMPLIED, REGARDING NON-INFRINGEMENT, MERCHANTABILITY, OR FITNESS FOR PARTICULAR PURPOSE OF THE PRODUCTS. ANY BUYER OR USER ACKNOWLEDGES THAT THE BUYER OR USER ALONE HAS DETERMINED THAT THE PRODUCTS WILL SUITABLY MEET THE REQUIREMENTS OF THEIR INTENDED USE. OMRON DISCLAIMS ALL OTHER WARRANTIES, EXPRESS OR IMPLIED.

LIMITATIONS OF LIABILITY

OMRON SHALL NOT BE RESPONSIBLE FOR SPECIAL, INDIRECT, OR CONSEQUENTIAL DAMAGES, LOSS OF PROFITS OR COMMERCIAL LOSS IN ANY WAY CONNECTED WITH THE PRODUCTS, WHETHER SUCH CLAIM IS BASED ON CONTRACT, WARRANTY, NEGLIGENCE, OR STRICT LIABILITY.

In no event shall the responsibility of OMRON for any act exceed the individual price of the product on which liability is asserted.

IN NO EVENT SHALL OMRON BE RESPONSIBLE FOR WARRANTY, REPAIR, OR OTHER CLAIMS REGARDING THE PRODUCTS UNLESS OMRON'S ANALYSIS CONFIRMS THAT THE PRODUCTS WERE PROPERLY HANDLED, STORED, INSTALLED, AND MAINTAINED AND NOT SUBJECT TO CONTAMINATION, ABUSE, MISUSE, OR INAPPROPRIATE MODIFICATION OR REPAIR.

Application Considerations

SUITABILITY FOR USE

OMRON shall not be responsible for conformity with any standards, codes, or regulations that apply to the combination of the product in the customer's application or use of the product.

Take all necessary steps to determine the suitability of the product for the systems, machines, and equipment with which it will be used.

Know and observe all prohibitions of use applicable to this product.

NEVER USE THE PRODUCT FOR AN APPLICATION INVOLVING SERIOUS RISK TO LIFE OR PROPERTY WITHOUT ENSURING THAT THE SYSTEM AS A WHOLE HAS BEEN DESIGNED TO ADDRESS THE RISKS, AND THAT THE OMRON PRODUCT IS PROPERLY RATED AND INSTALLED FOR THE INTENDED USE WITHIN THE OVERALL EQUIPMENT OR SYSTEM.

PROGRAMMABLE PRODUCTS

OMRON shall not be responsible for the user's programming of a programmable product, or any consequence thereof.

Disclaimers

CHANGE IN SPECIFICATIONS

Product specifications and accessories may be changed at any time based on improvements and other reasons. Consult with your OMRON representative at any time to confirm actual specifications of purchased product.

DIMENSIONS AND WEIGHTS

Dimensions and weights are nominal and are not to be used for manufacturing purposes, even when tolerances are shown.

PERFORMANCE DATA

Performance data given in this catalog is provided as a guide for the user in determining suitability and does not constitute a warranty. It may represent the result of OMRON's test conditions, and the users must correlate it to actual application requirements. Actual performance is subject to the OMRON Warranty and Limitations of Liability.

Note: Do not use this document to operate the Unit.

OMRON Corporation
FA Systems Division H.Q.
66 Matsumoto
Mishima-city, Shizuoka 411-8511
Japan
Tel:(81)55-977-9181
Fax:(81)55-977-9045

Regional Headquarters

OMRON EUROPE B.V.
Wegalaan 67-69, NL-2132 JD Hoofddorp
The Netherlands
Tel:(31)2356-81-300/Fax:(31)2356-81-388

OMRON ELECTRONICS LLC
1 East Commerce Drive, Schaumburg, IL 60173
U.S.A.
Tel:(1)847-843-7900/Fax:(1)847-843-8568

OMRON ASIA PACIFIC PTE. LTD.
83 Clemenceau Avenue,
#11-01, UE Square,
Singapore 239920
Tel:(65)6835-3011/Fax:(65)6835-2711

Authorized Distributor:

Note: Specifications subject to change without notice.

Cat. No. P050-E1-07
Printed in Japan
1003-1M